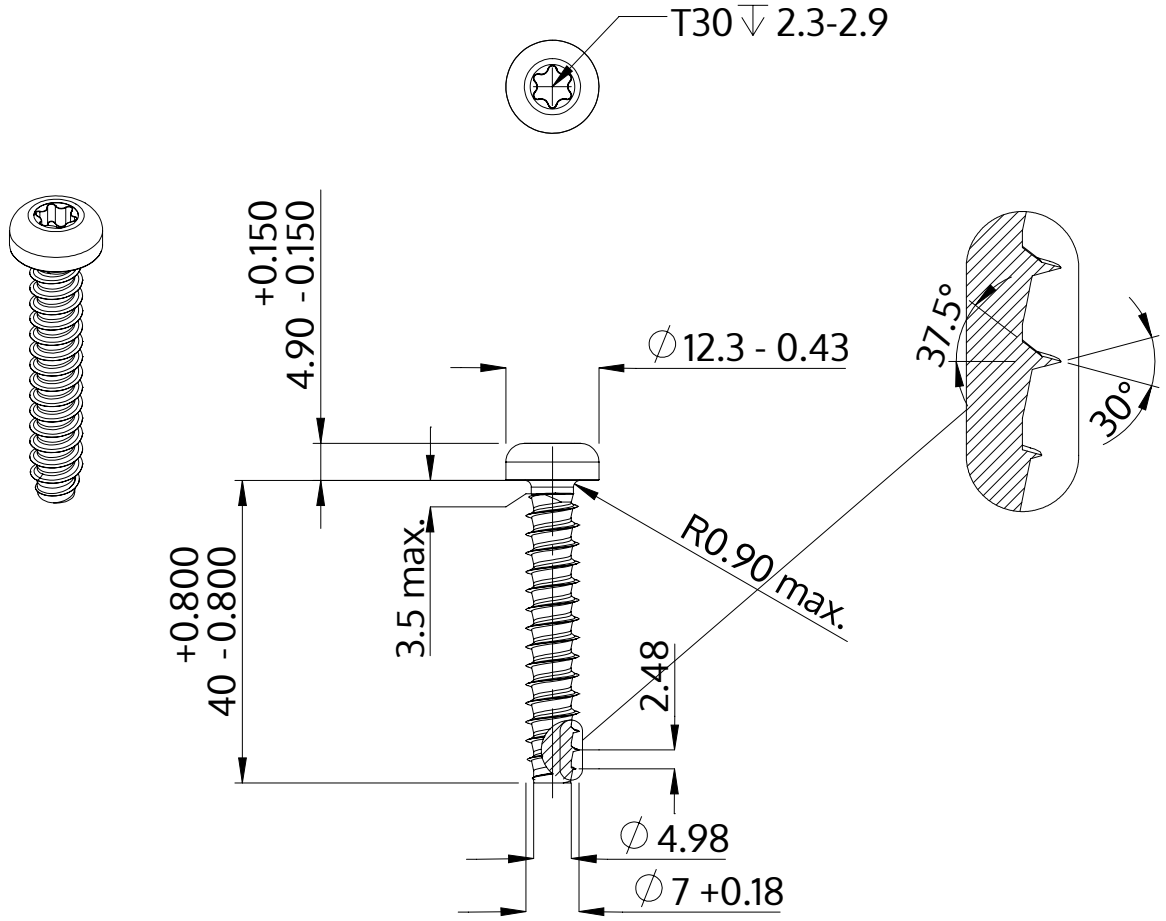

Description	STP39 7.0x40.0 - T30
Material	stainless-steel A2
Surface	bright, pickled and passivated
Weight	10.964 kg / 1000 pieces

SCREWERK	**STP390700400E**	
Metric Drawing A4	Scale 1:1	2024-10