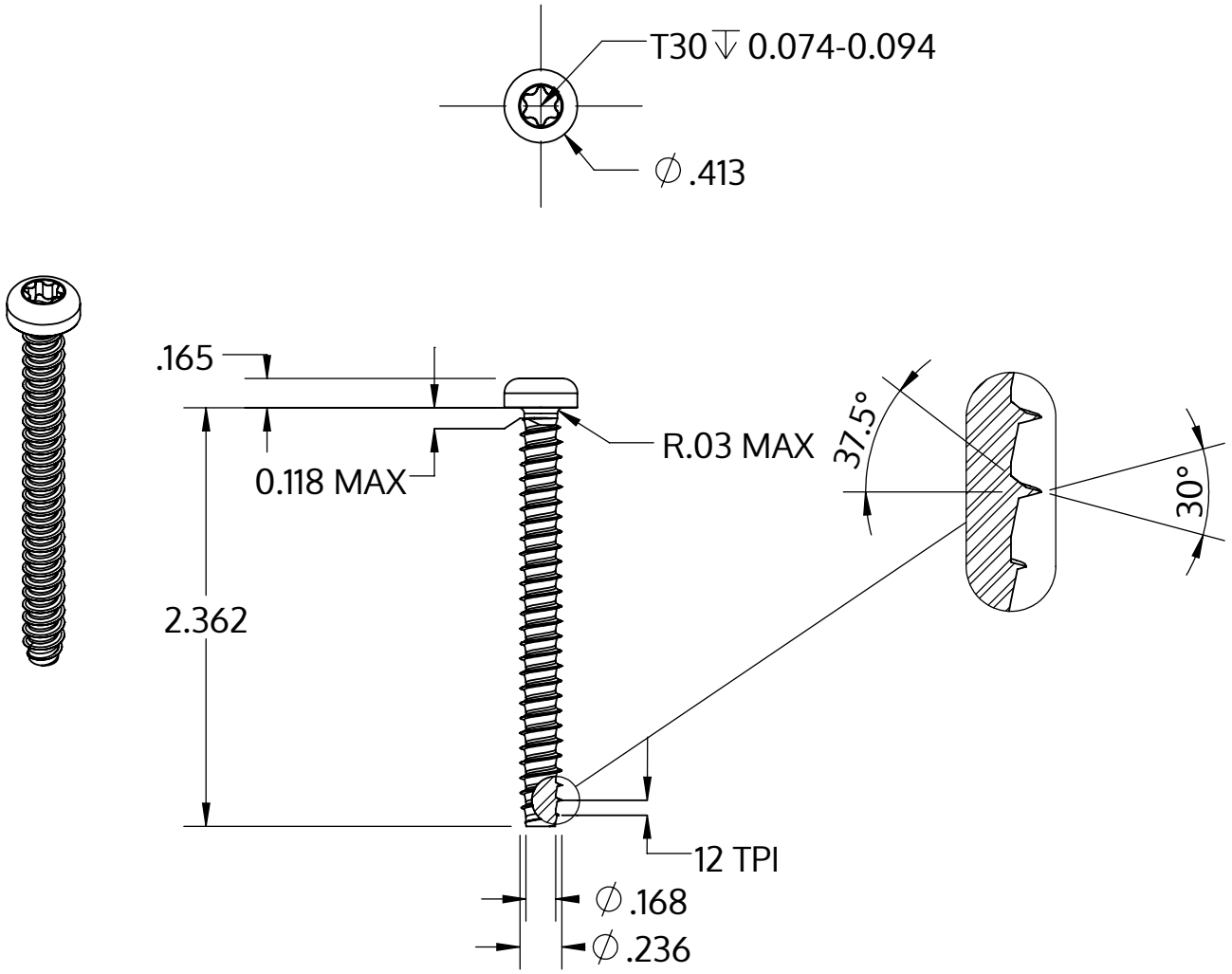

Metric size	M6 x 2.14 mm
US size (converted)	#0.236-12
	Tolerances [inch]
Length	+/- 0.037
Head diameter	+0 / -0.016
Head height	+/- 0.005
Thread diameter	+0.005 / -0

Descrizione	STP39 6.0x60.0 - T30
Materiale	acciaio inossidabile A2
Superficie	bianco-decapato e passivato
Peso	10.226 kg / 1000 pezzi

SCREWERK	**STP390600600E**	
_Zoll Zeichnung Größe A	Scala 1:1	2024-10