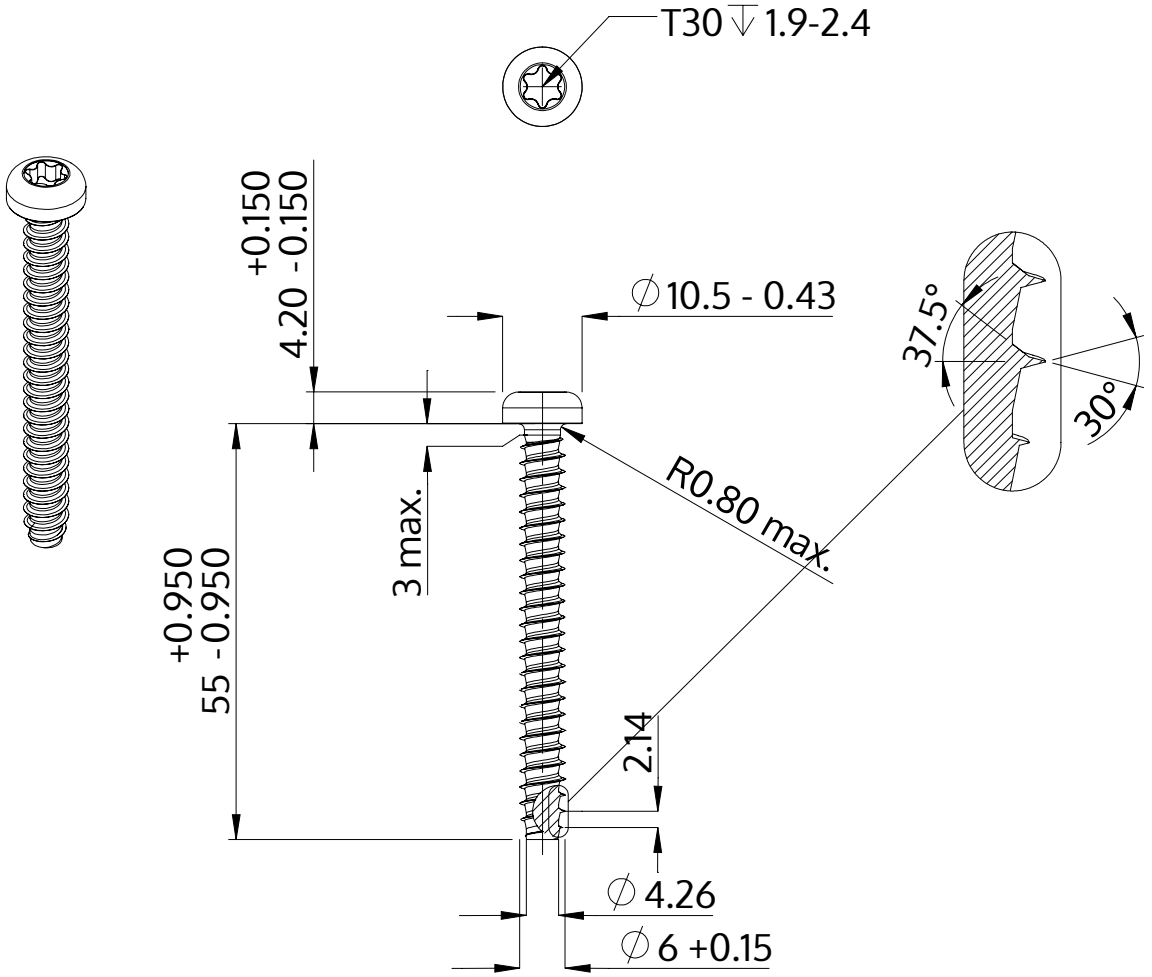

Description	STP39 6.0x55.0 - T30
Material	steel, hardened
Surface	Zinc-Nickel-plated min. 5µm, passivated black/ Cr-VI-free, baked, sealed
Weight	9.548 kg / 1000 pieces

SCREWERK	**STP390600550B**	
Metric Drawing A4	Scale 1:1	2024-10