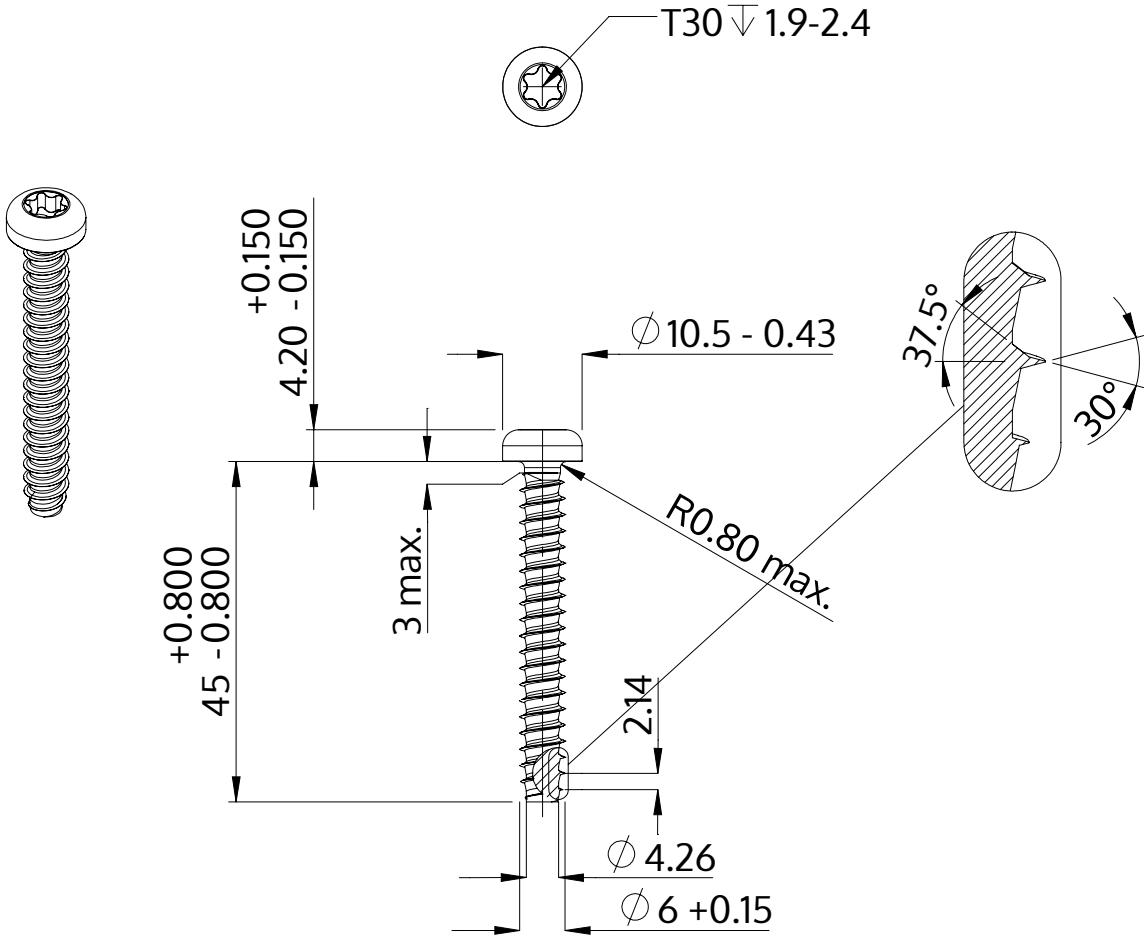

Description	STP39 6.0x45.0 - T30
Material	stainless-steel A2
Surface	bright, pickled and passivated
Weight	8.191 kg / 1000 pieces

SCREWERK	**STP390600450E**	
Metric Drawing A4	Scale 1:1	2024-10