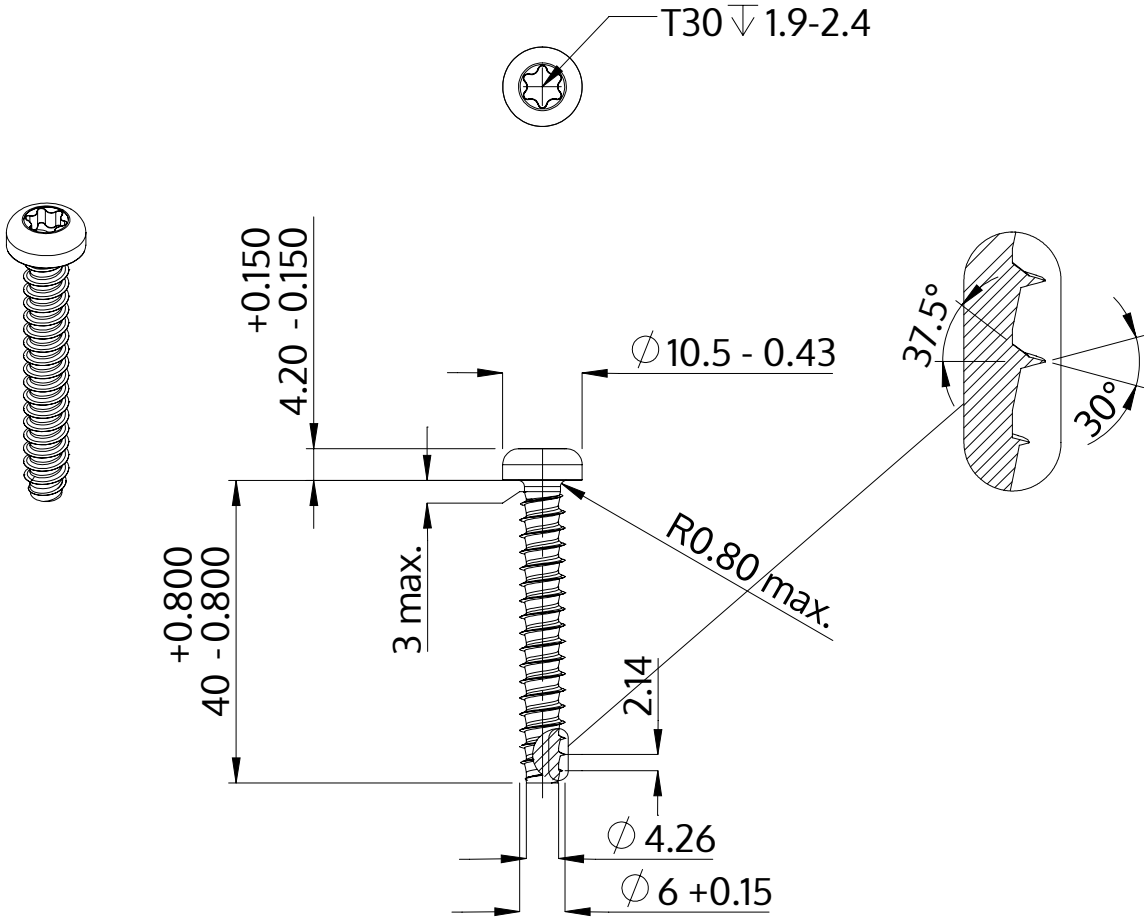

Description	STP39 6.0x40.0 - T30
Material	stainless steel A4
Surface	bright, pickled and passivated
Weight	7.513 kg / 1000 pieces

SCREWERK	**STP390600400C**	
Metric Drawing A4	Scale 1:1	2024-10