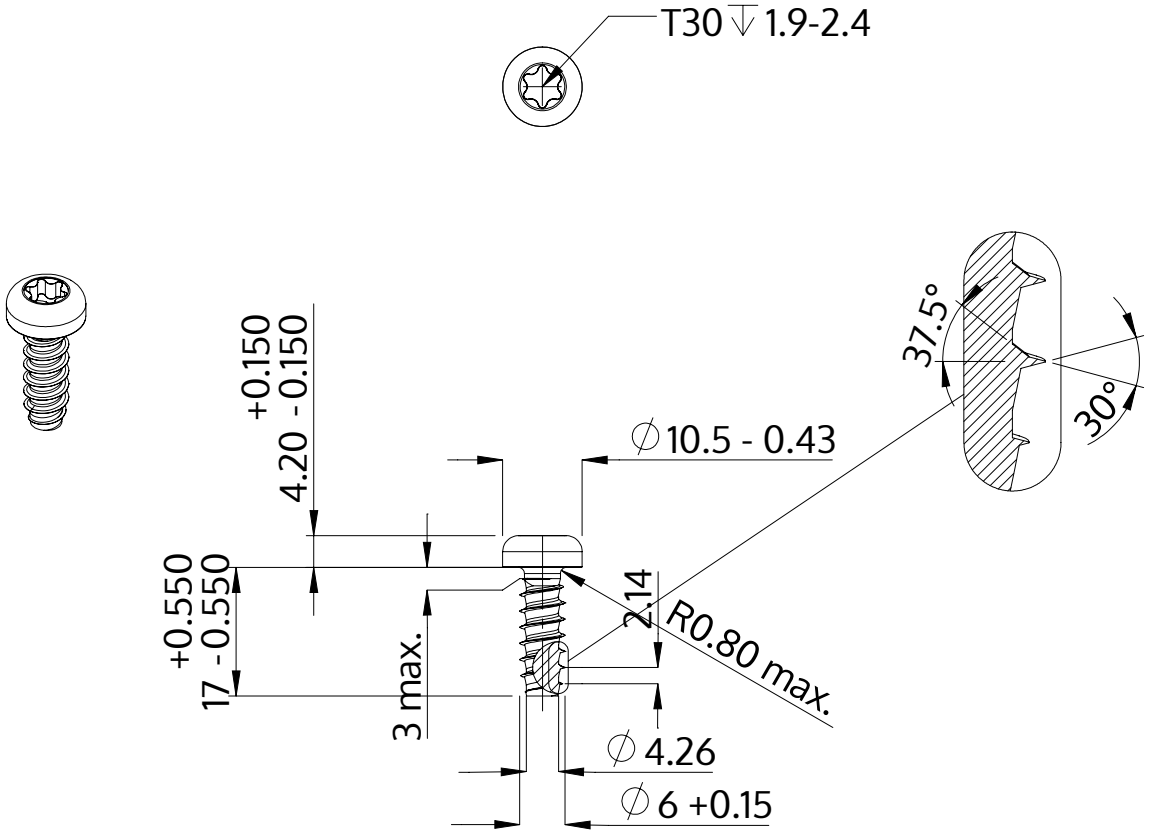


| | |
|---|---|
| Description | STP39 6.0x17.0 - T30 |
| Material | steel, hardened |
| Surface | Zinc-Nickel-plated min. 5µm, passivated black/ Cr-VI-free, baked, sealed |
| Weight | 4.393 kg / 1000 pieces |

| | | |
|---|---|---|
| SCREWERK | **STP390600170B** | |
| Metric Drawing A4 | Scale 1:1 | 2024-10 |