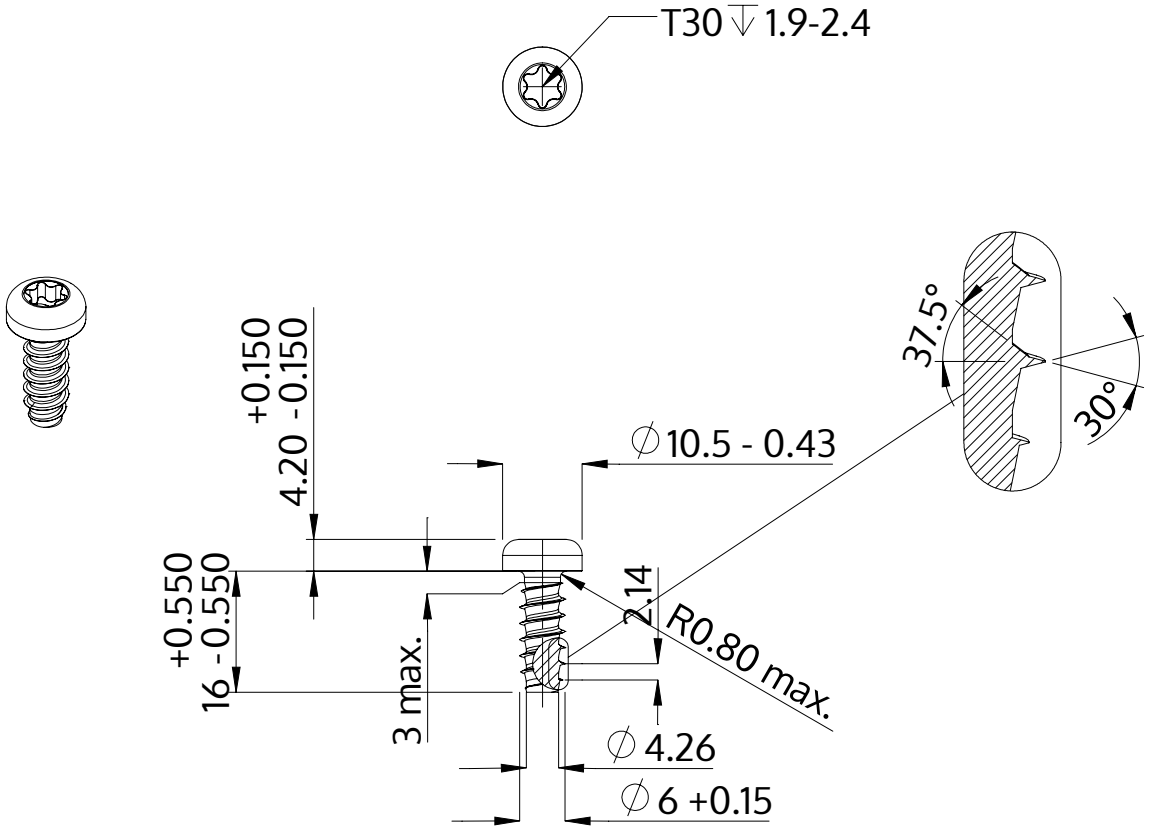

Description	STP39 6.0x16.0 - T30
Material	steel, hardened
Surface	zinc-plated 5-7 µm, baked, blue / transparent passivated
Weight	4.257 kg / 1000 pieces

SCREWERK	**STP390600160S**	
Metric Drawing A4	Scale 1:1	2024-10