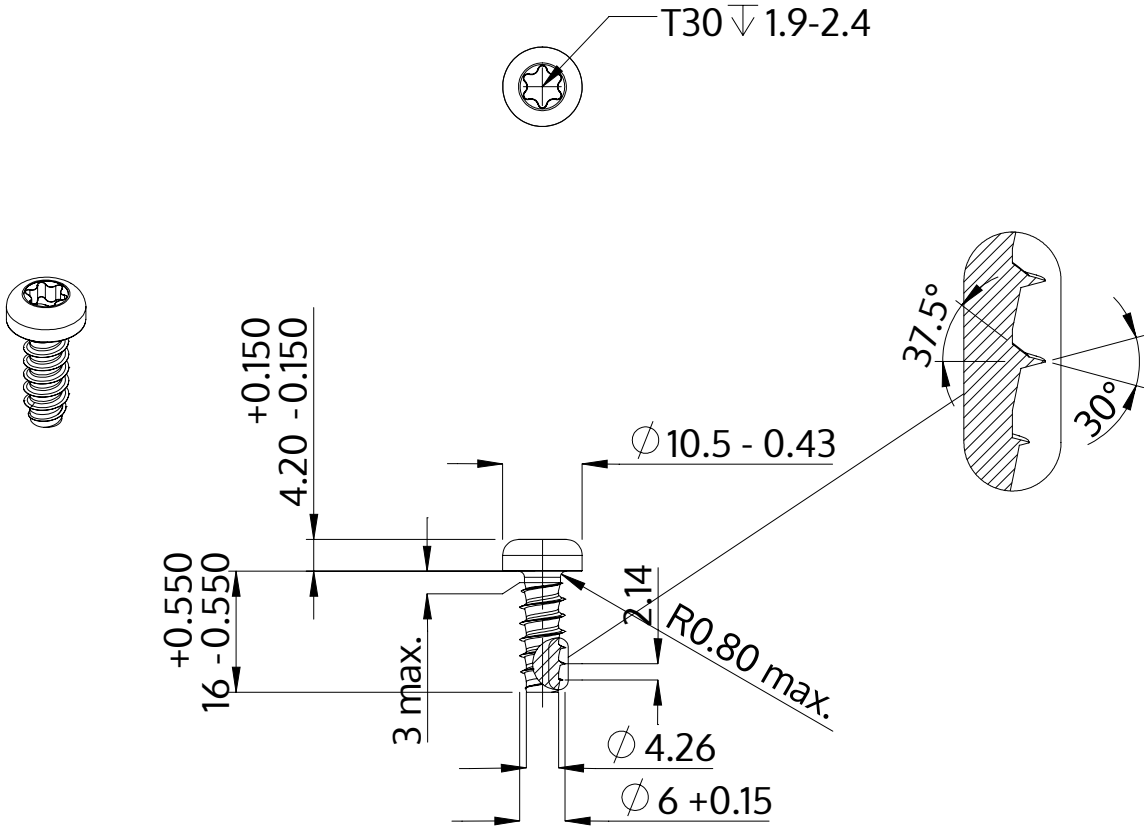

Description	STP39 6.0x16.0 - T30
Material	stainless-steel A2
Surface	bright, pickled and passivated
Weight	4.257 kg / 1000 pieces

SCREWERK	**STP390600160E**	
Metric Drawing A4	Scale 1:1	2024-10