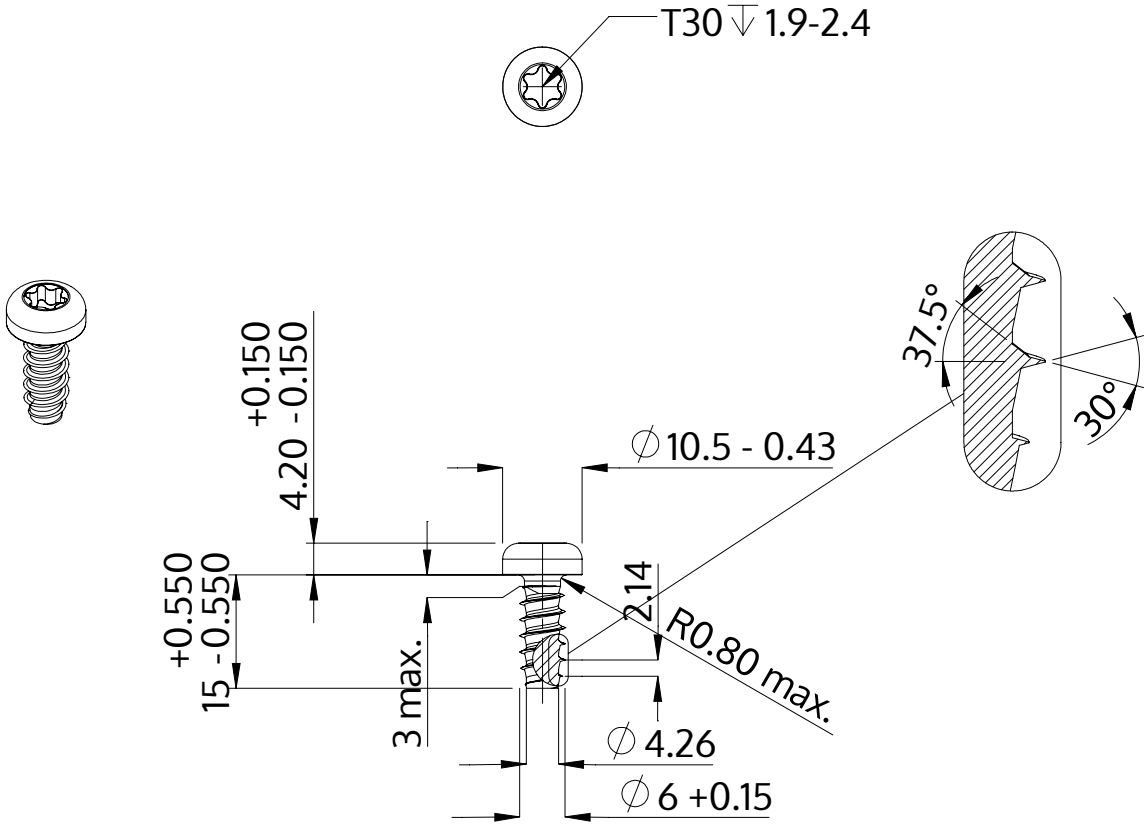


| | |
|---|---|
| Description | STP39 6.0x15.0 - T30 |
| Material | stainless steel A4 |
| Surface | bright, pickled and passivated |
| Weight | 4.122 kg / 1000 pieces |

| | | |
|---|---|---|
| SCREWERK | **STP390600150C** | |
| Metric Drawing A4 | Scale None:1 | 2024-04 |