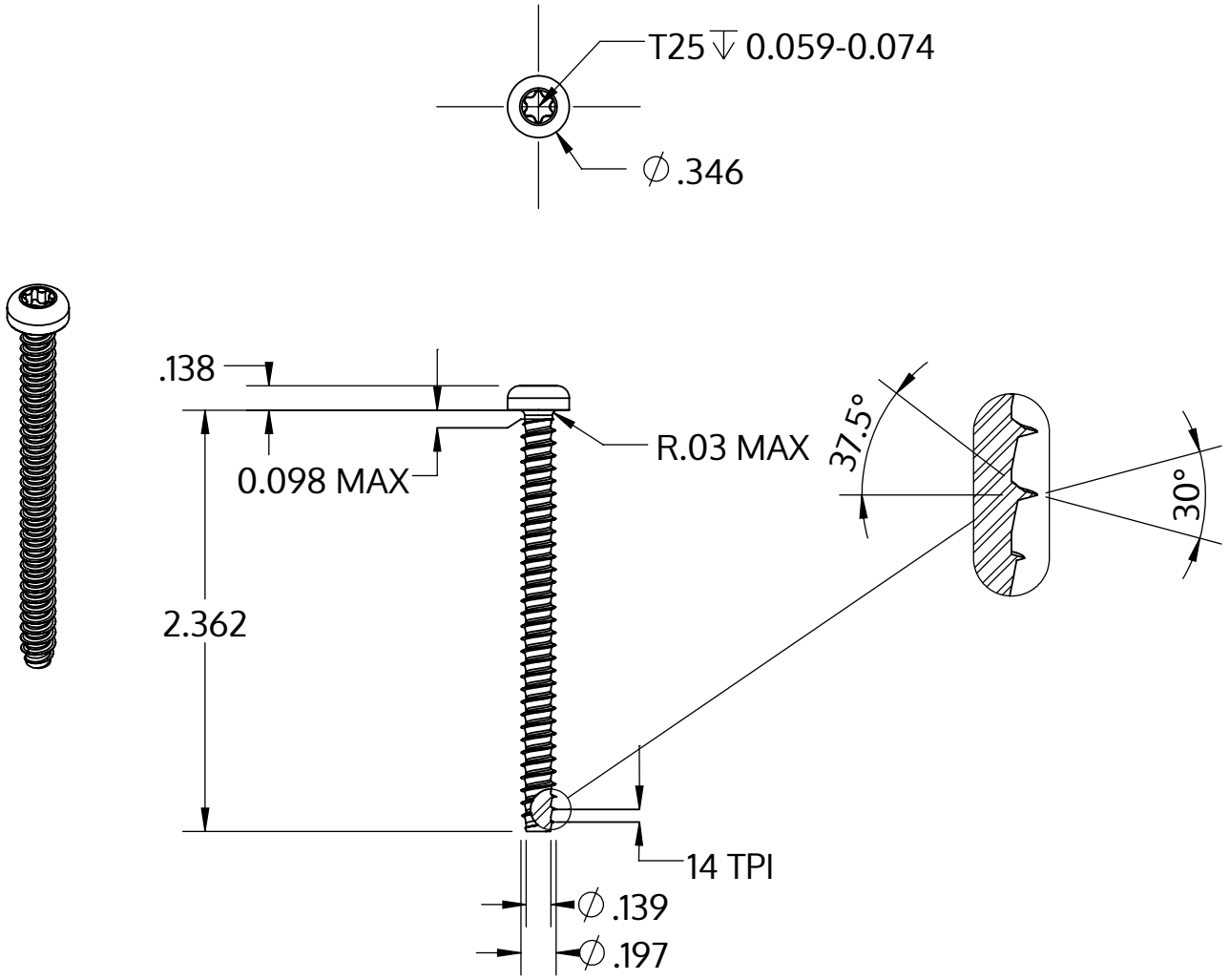


| | |
|---|---|
| Metric size | M5 x 1.8 mm |
| US size (converted) | #11-14 |
| | Tolerances [inch] |
| Length | +/- 0.037 |
| Head diameter | +0 / -0.014 |
| Head height | +/- 0.005 |
| Thread diameter | +0.005 / -0 |

| | |
|---|---|
| Beschrijving | STP39 5.0x60.0 - T25 |
| Materiaal | veredeld staal |
| Oppervlak | verzinkt 5-7 µm, getempert, blauw / transparant gepassiveerd |
| Gewicht | 6.886 kg / 1000 stuk |

| | | |
|---|---|---|
| SCREWERK | **STP390500600S** | |
| _Zoll Zeichnung Größe A | Schaal 2:1 | 2024-10 |