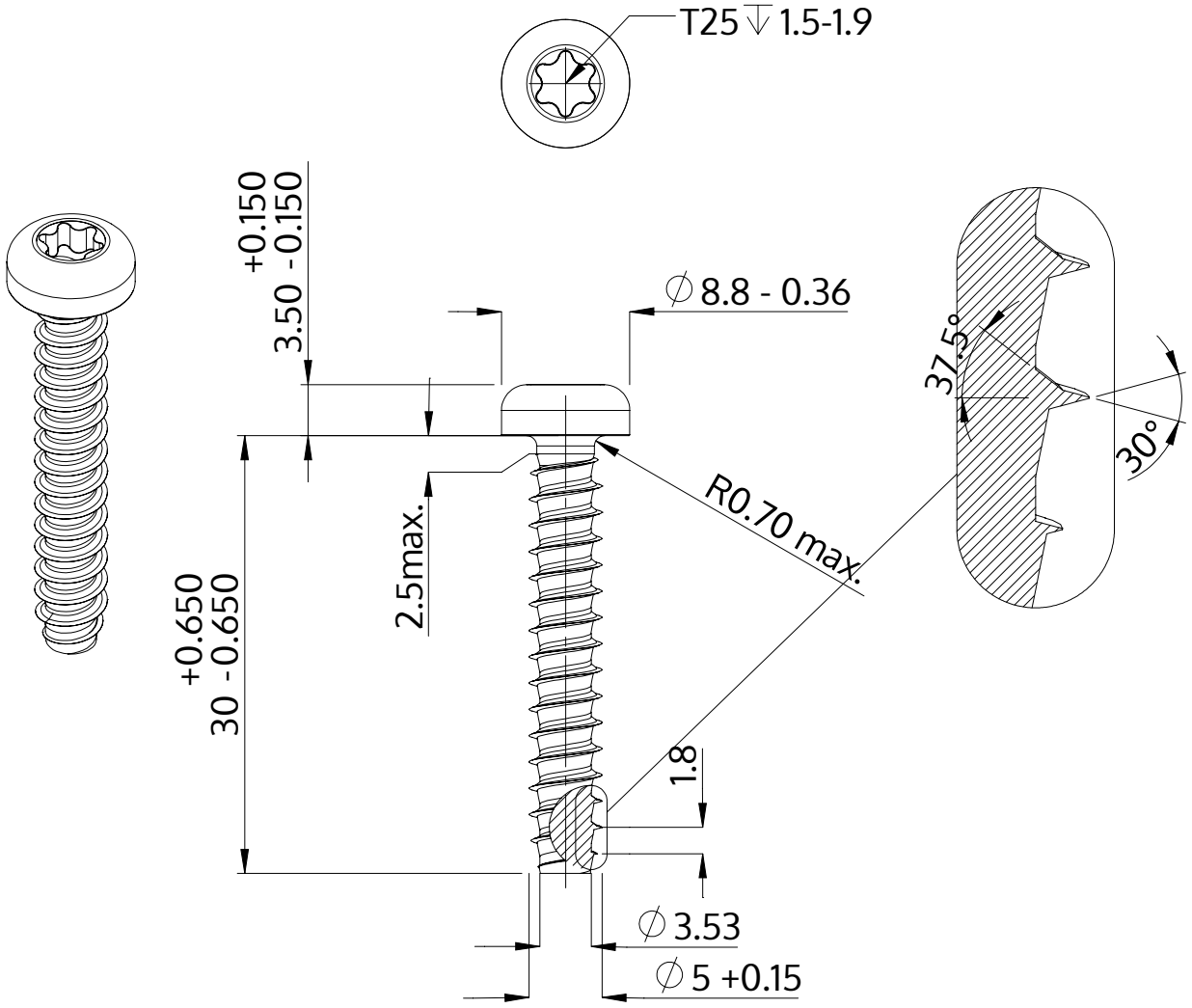

Description	STP39 5.0x30.0 - T25
Material	stainless-steel A2
Surface	black
Weight	4.048 kg / 1000 pieces

SCREWERK	**STP390500300J**	
Metric Drawing A4	Scale None:1	2024-04