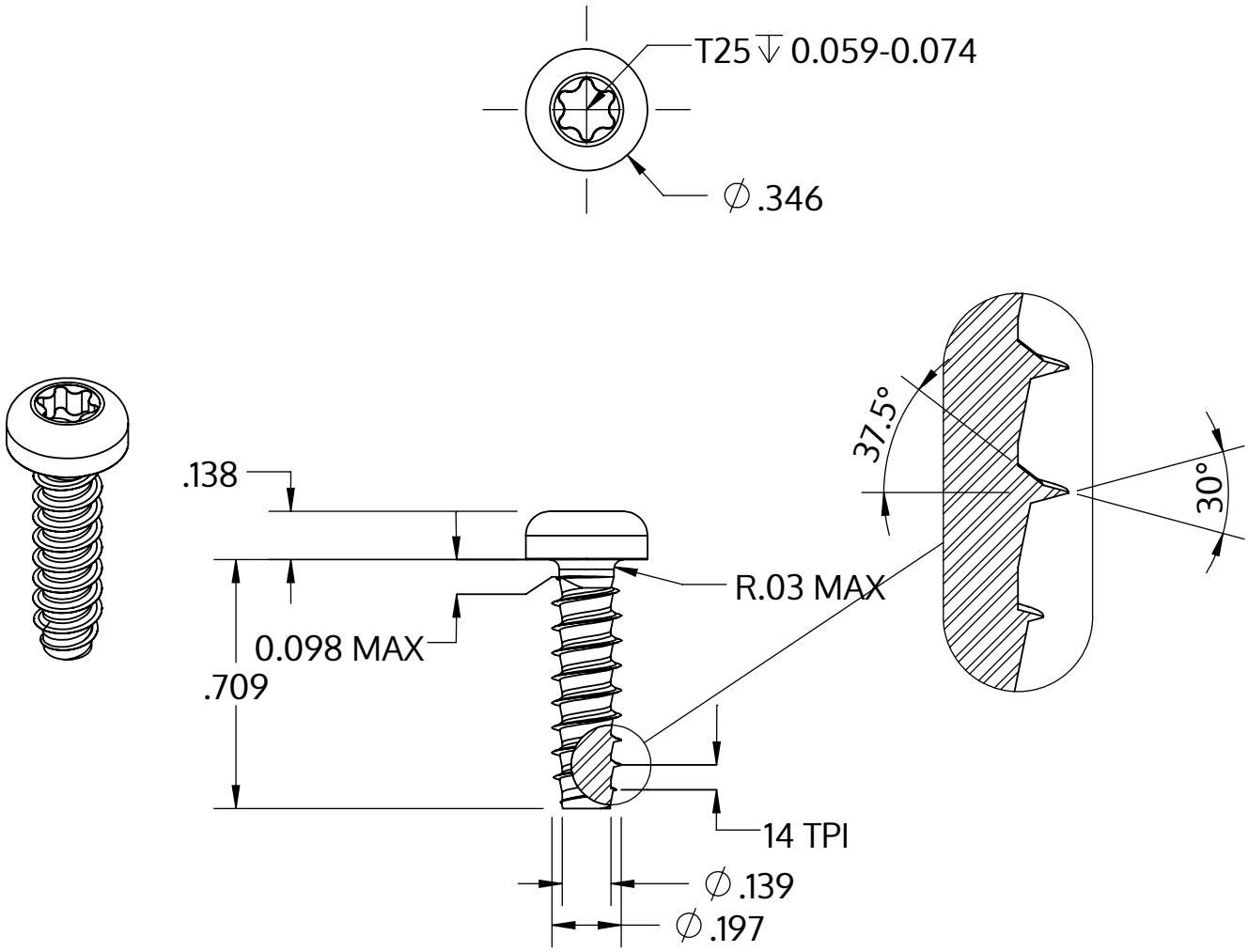

Metric size	M5 x 1.8 mm
US size (converted)	#11-14
	Tolerances [inch]
Length	+/- 0.021
Head diameter	+0 / -0.014
Head height	+/- 0.005
Thread diameter	+0.005 / -0

Description	STP39 5.0x18.0 - T25
Material	steel, hardened
Surface	zinc-plated 5-7 µm, baked, blue / transparent passivated
Weight	2.912 kg / 1000 pieces

SCREWERK	**STP390500180S**	
Inch Drawing Size A	Scale 2:1	2024-10