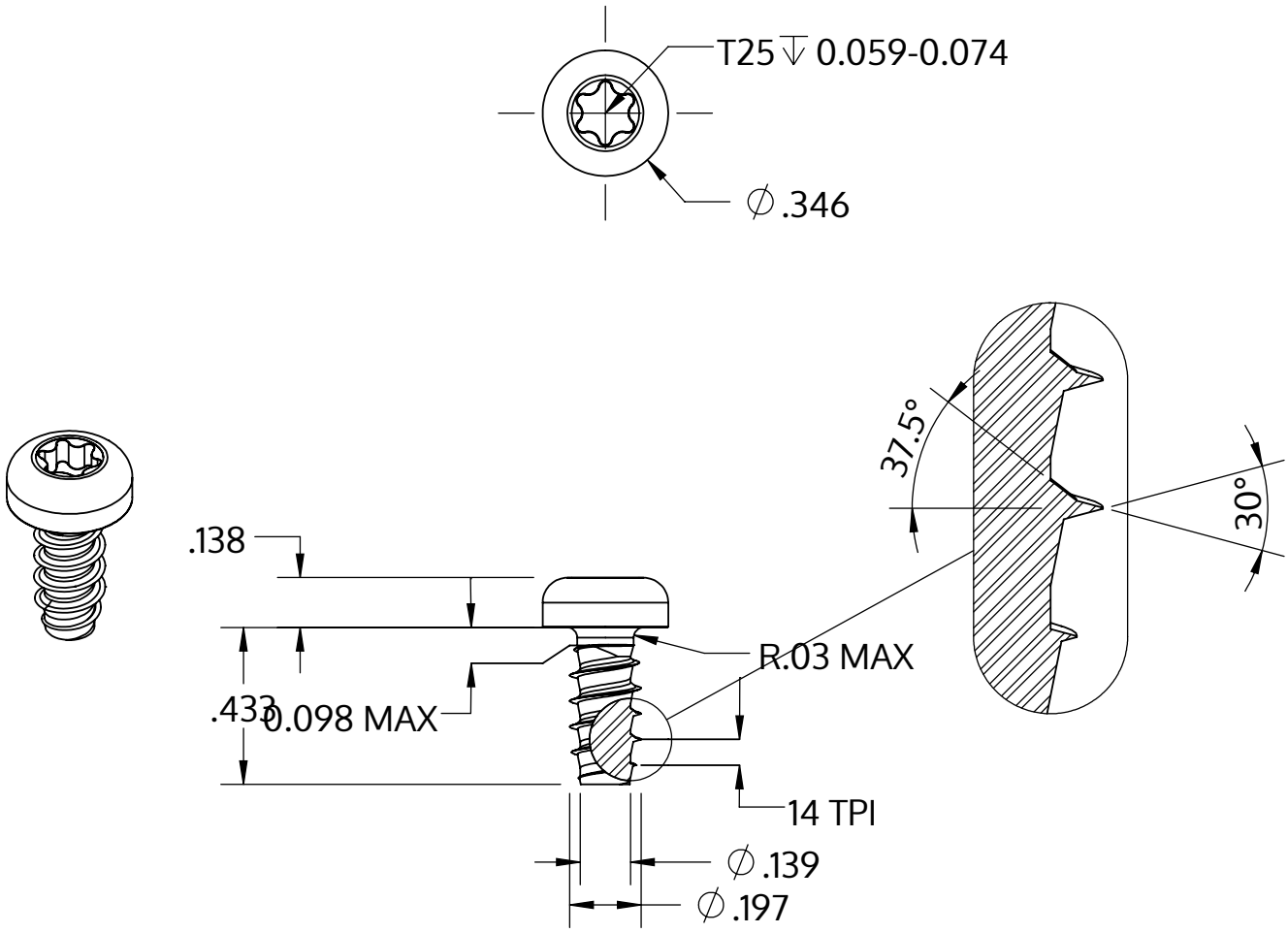


| | |
|---|---|
| Metric size | M5 x 1.8 mm |
| US size (converted) | #11-14 |
| | Tolerances [inch] |
| Length | +/- 0.021 |
| Head diameter | +0 / -0.014 |
| Head height | +/- 0.005 |
| Thread diameter | +0.005 / -0 |

| | |
|---|---|
| Descripción | STP39 5.0x11.0 - T25 |
| Material | Acero, endurecido |
| Superficie | galvanizado 5-7 micras, recocido, azul / pasivado transparente |
| Peso | 2.250 kg / 1000 Piezas |

| | | |
|---|---|---|
| SCREWERK | **STP390500110S** | |
| _Zoll Zeichnung Größe A | Escalada 2:1 | 2024-10 |