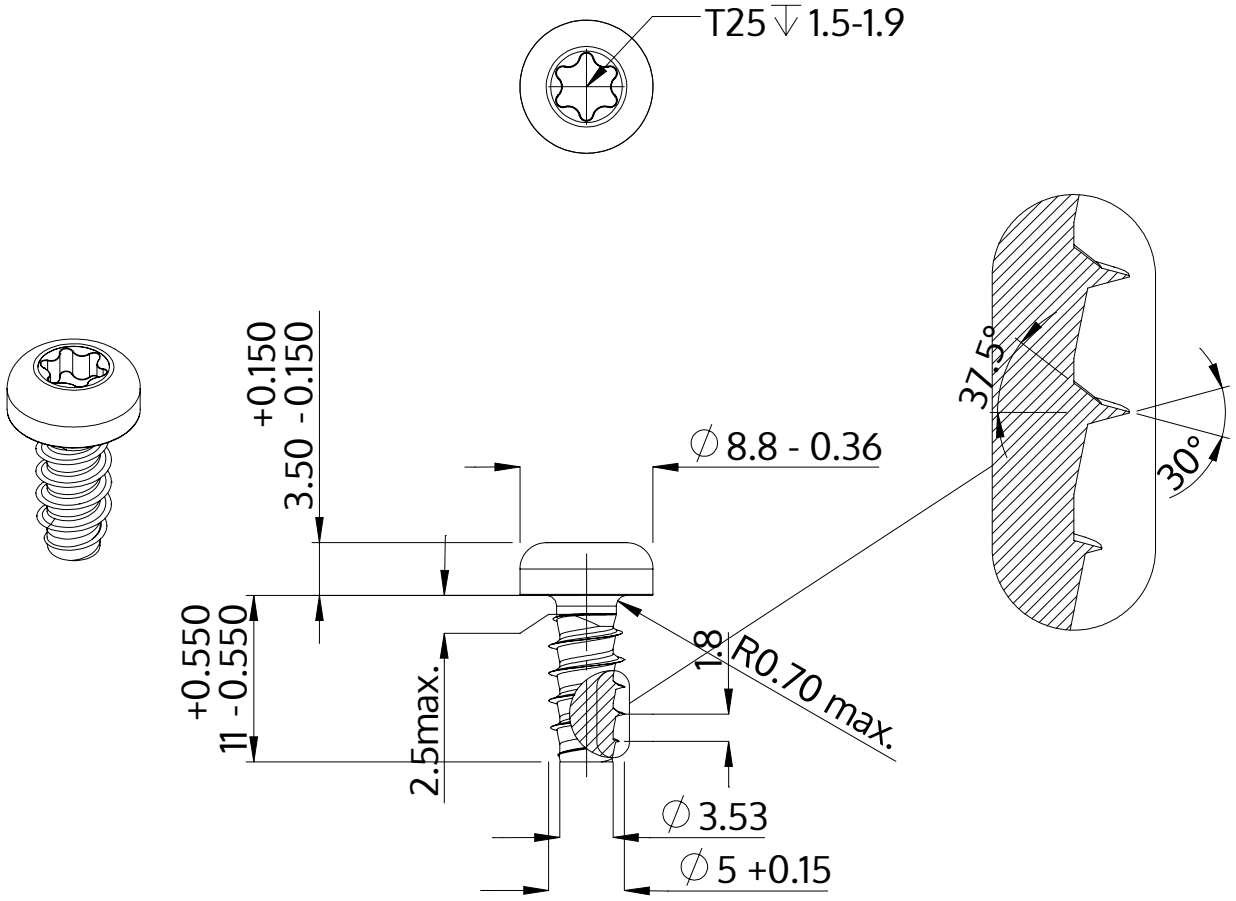

Description	STP39 5.0x11.0 - T25
Material	steel, hardened
Surface	zinc-plated 5-7 µm, baked, blue / transparent passivated
Weight	2.250 kg / 1000 pieces

SCREWERK	**STP390500110S**	
Metric Drawing A4	Scale 2:1	2024-10