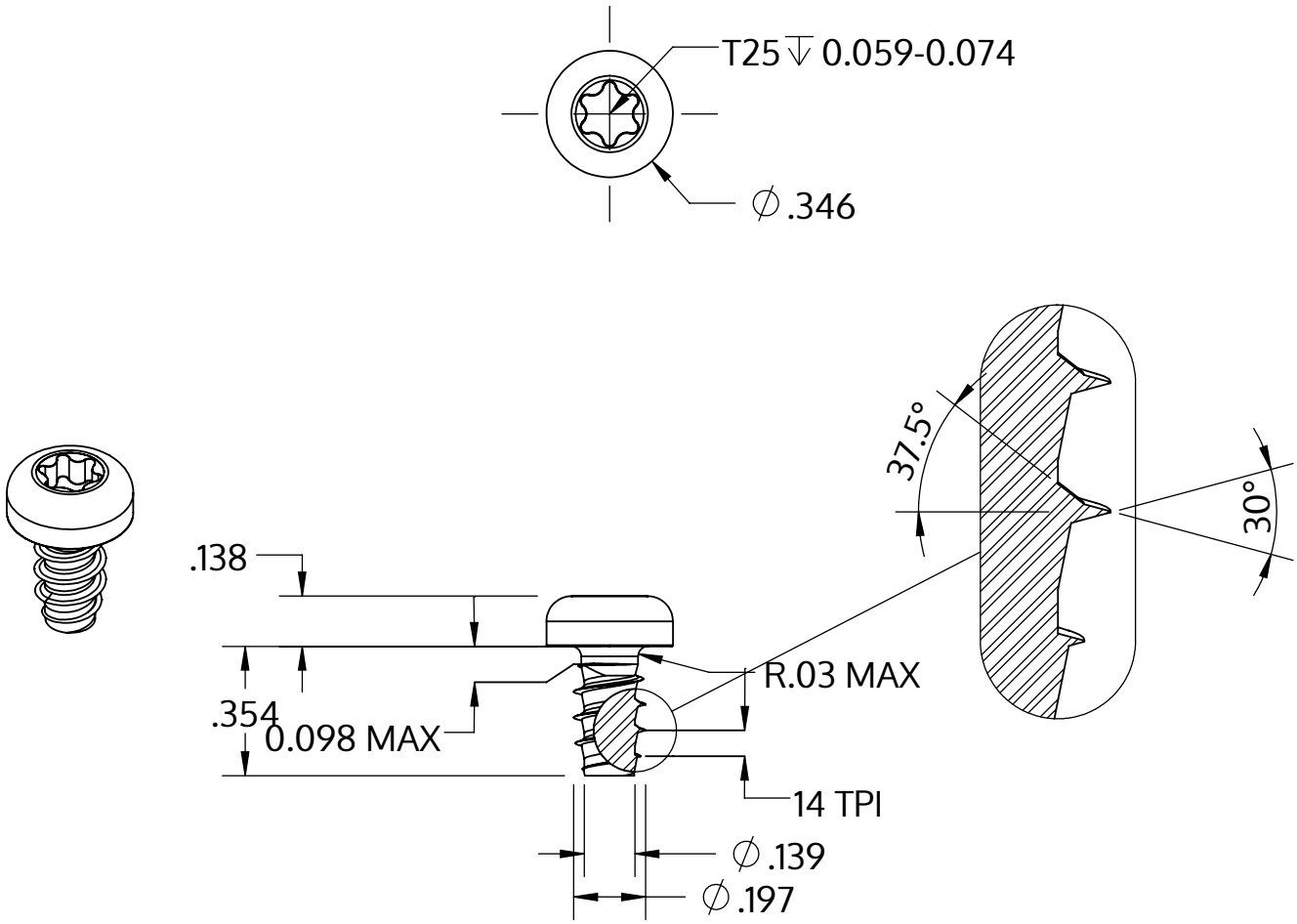


| | |
|---|---|
| Metric size | M5 x 1.8 mm |
| US size (converted) | #11-14 |
| | Tolerances [inch] |
| Length | +/- 0.017 |
| Head diameter | +0 / -0.014 |
| Head height | +/- 0.005 |
| Thread diameter | +0.005 / -0 |

| | |
|---|---|
| Beskrivelse | STP39 5.0x9.0 - T25 |
| Materiale | Stål, forædlet |
| Overflade | galvaniseret 5-7 µm, tempret, blå / transparent passiveret |
| Vægt | 2.061 kg / 1000 stykke |

| | | |
|---|---|---|
| SCREWERK | **STP390500090S** | |
| _Zoll Zeichnung Größe A | Skalering 2:1 | 2024-10 |