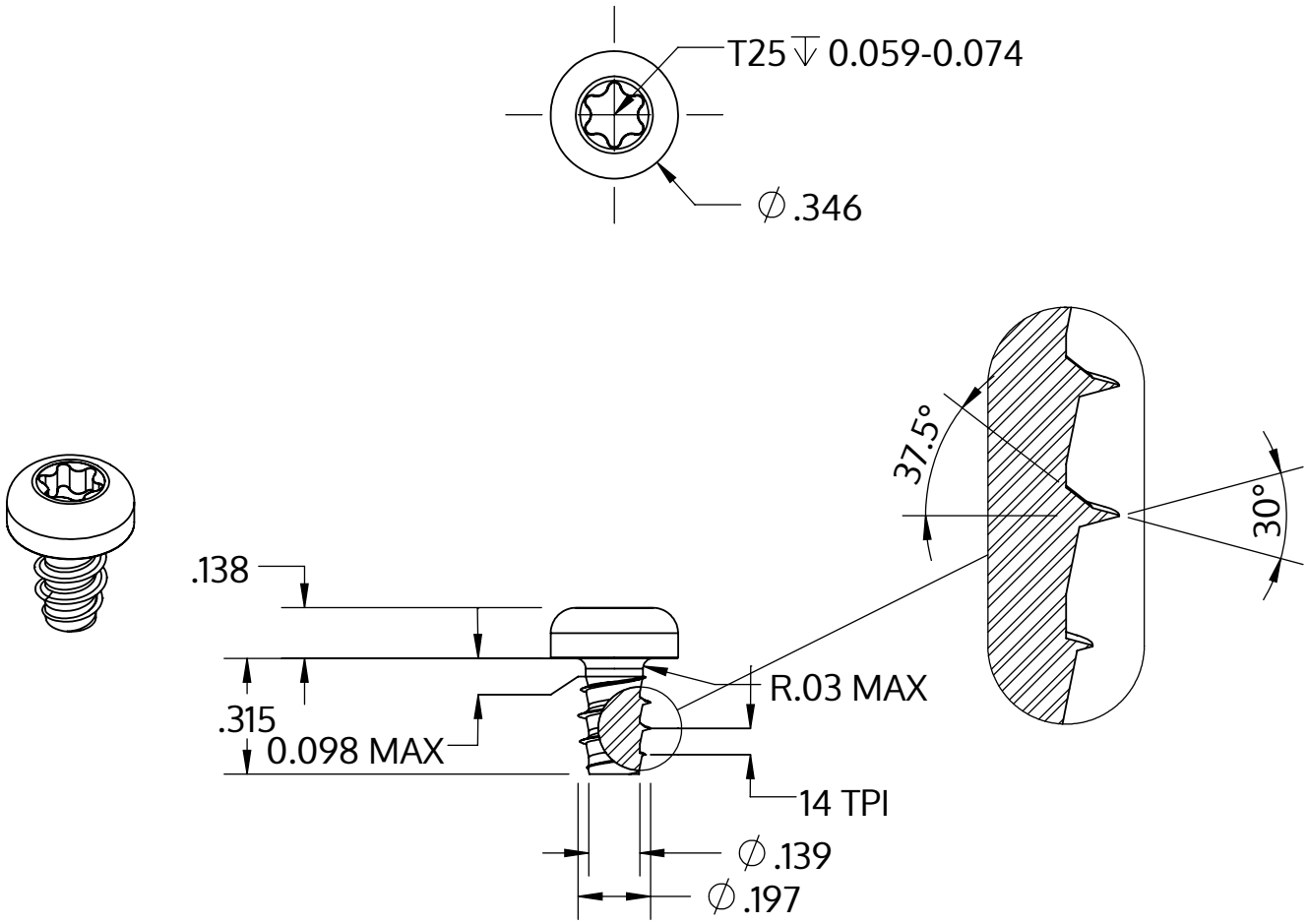


| | |
|---|---|
| Metric size | M5 x 1.8 mm |
| US size (converted) | #11-14 |
| | Tolerances [inch] |
| Length | +/- 0.017 |
| Head diameter | +0 / -0.014 |
| Head height | +/- 0.005 |
| Thread diameter | +0.005 / -0 |

| | |
|---|---|
| Description | STP39 5.0x8.0 - T25 |
| Material | steel, hardened |
| Surface | zinc-plated 5-7 µm, baked, blue / transparent passivated |
| Weight | 1.966 kg / 1000 pieces |

| | | |
|---|---|---|
| SCREWERK | **STP390500080S** | |
| Inch Drawing Size A | Scale 2:1 | 2024-10 |