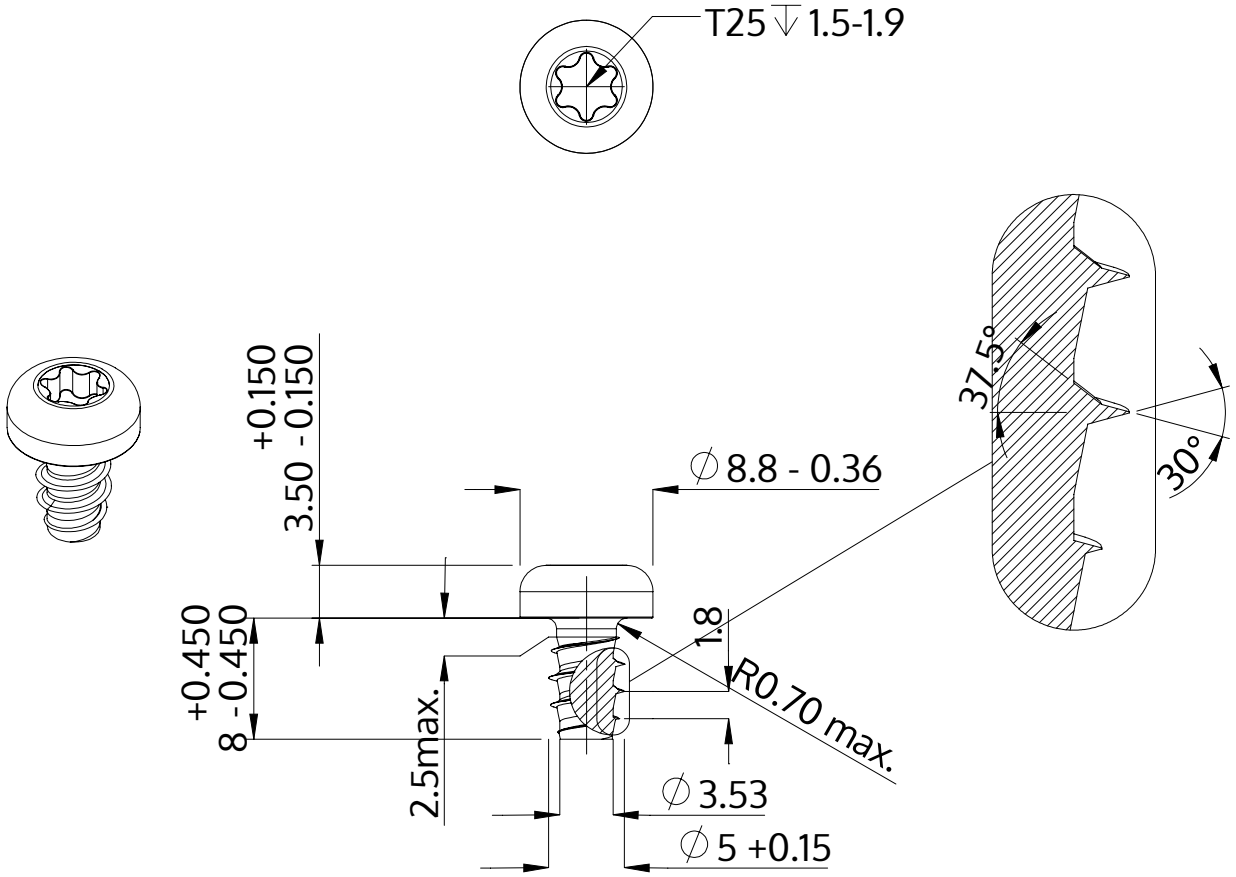

Description	STP39 5.0x8.0 - T25
Material	stainless-steel A2
Surface	bright, pickled and passivated
Weight	1.966 kg / 1000 pieces

SCREWERK	**STP390500080E**	
Metric Drawing A4	Scale 2:1	2024-10