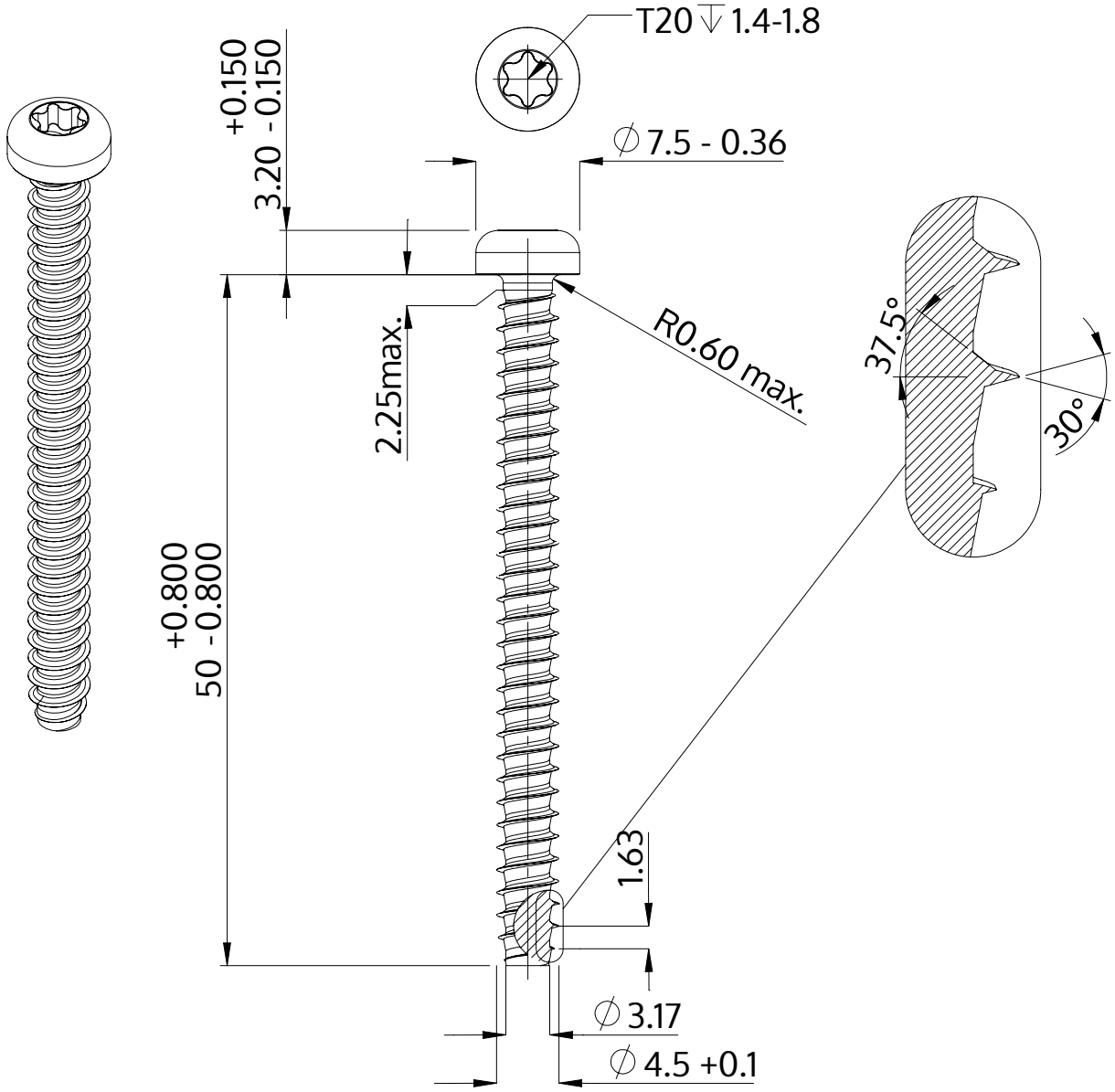

Description	STP39 4.5x50.0 - T20
Material	stainless-steel A2
Surface	bright, pickled and passivated
Weight	4.621 kg / 1000 pieces

SCREWERK	**STP390450500E**	
Metric Drawing A4	Scale None:1	2024-04