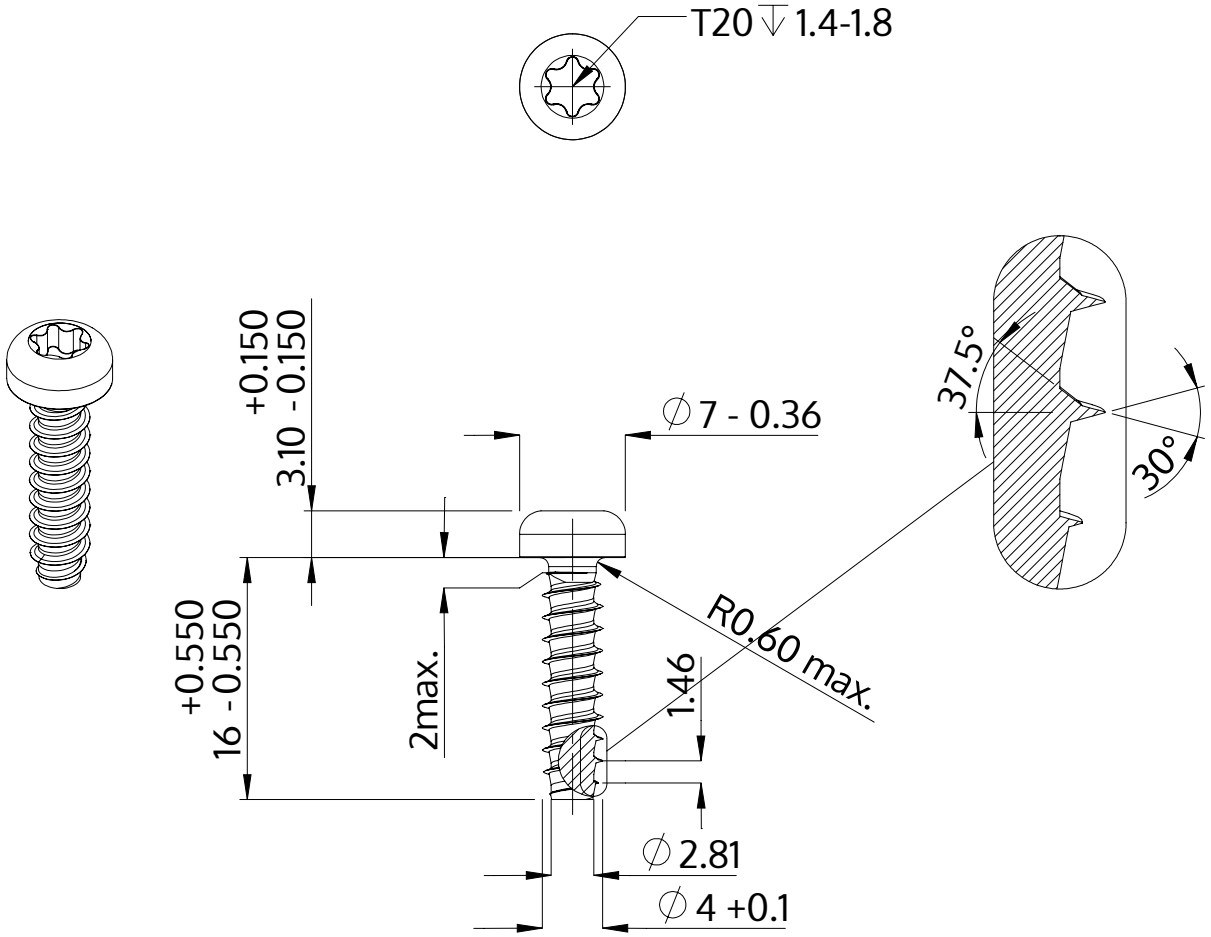

Description	STP39 4.0x16.0 - T20
Material	stainless steel A4
Surface	bright, pickled and passivated
Weight	1.614 kg / 1000 pieces

SCREWERK	**STP390400160C**	
Metric Drawing A4	Scale 2:1	2024-10