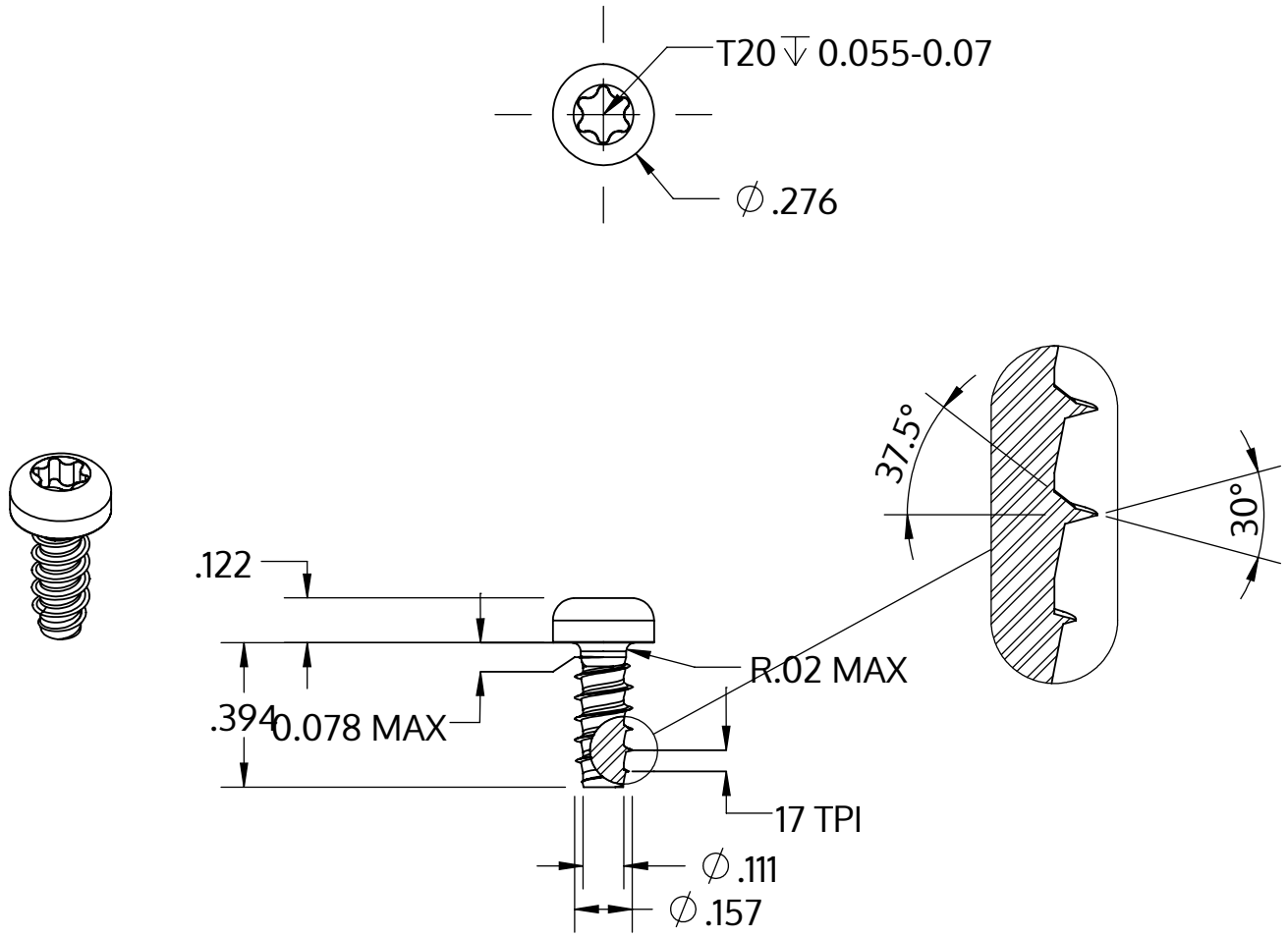

Metric size	M4 x 1.46 mm
US size (converted)	#8-17
	Tolerances [inch]
Length	+/- 0.017
Head diameter	+0 / -0.014
Head height	+/- 0.005
Thread diameter	+0.003 / -0

Descripción	STP39 4.0x10.0 - T20
Material	Acero Inoxidable A2
Superficie	negro
Peso	1.250 kg / 1000 Piezas

SCREWERK	**STP390400100J**	
_Zoll Zeichnung Größe A	Escalada 2:1	2024-10