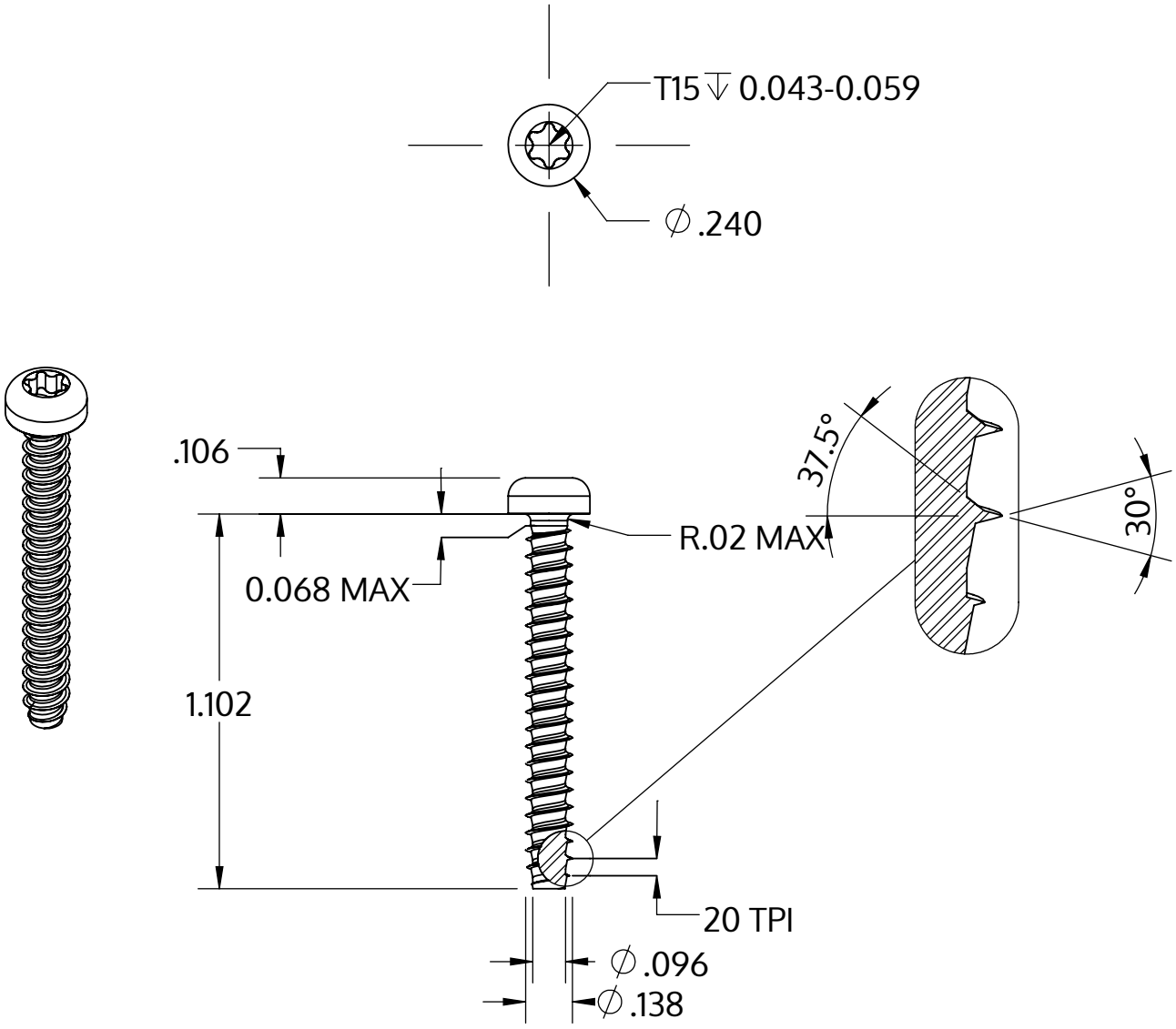


| | |
|---|---|
| Metric size | M3.5 x 1.29 mm |
| US size (converted) | #6-20 |
| | Tolerances [inch] |
| Length | +/- 0.025 |
| Head diameter | +0 / -0.014 |
| Head height | +/- 0.004 |
| Thread diameter | +0.003 / -0 |

| | |
|---|---|
| Descriere | STP39 3.5x28.0 - T15 |
| Material | oţel inoxidabil A4 |
| Exterior | neacoperit, murat și pasivat |
| Greutate | 1.763 kg / 1000 unități |

| | | |
|---|---|---|
| SCREWERK | **STP390350280C** | |
| _Zoll Zeichnung Größe A | Scalarea 2:1 | 2024-10 |