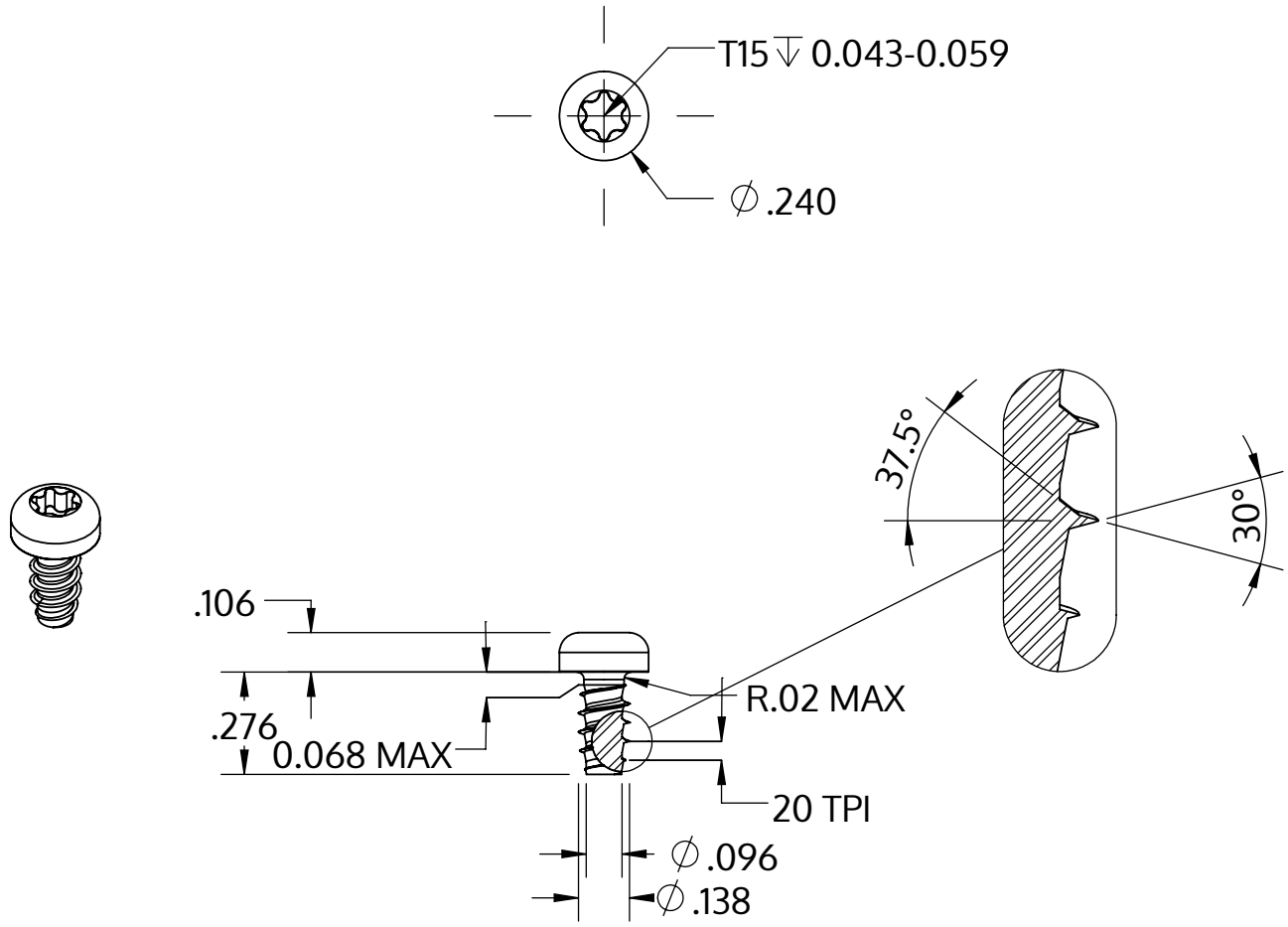

Metric size	M3.5 x 1.29 mm
US size (converted)	#6-20
	Tolerances [inch]
Length	+/- 0.017
Head diameter	+0 / -0.014
Head height	+/- 0.004
Thread diameter	+0.003 / -0

Description	STP39 3.5x7.0 - T15
Material	stainless-steel A2
Surface	bright, pickled and passivated
Weight	0.771 kg / 1000 pieces

SCREWERK	**STP390350070E**	
Inch Drawing Size A	Scale 2:1	2024-10