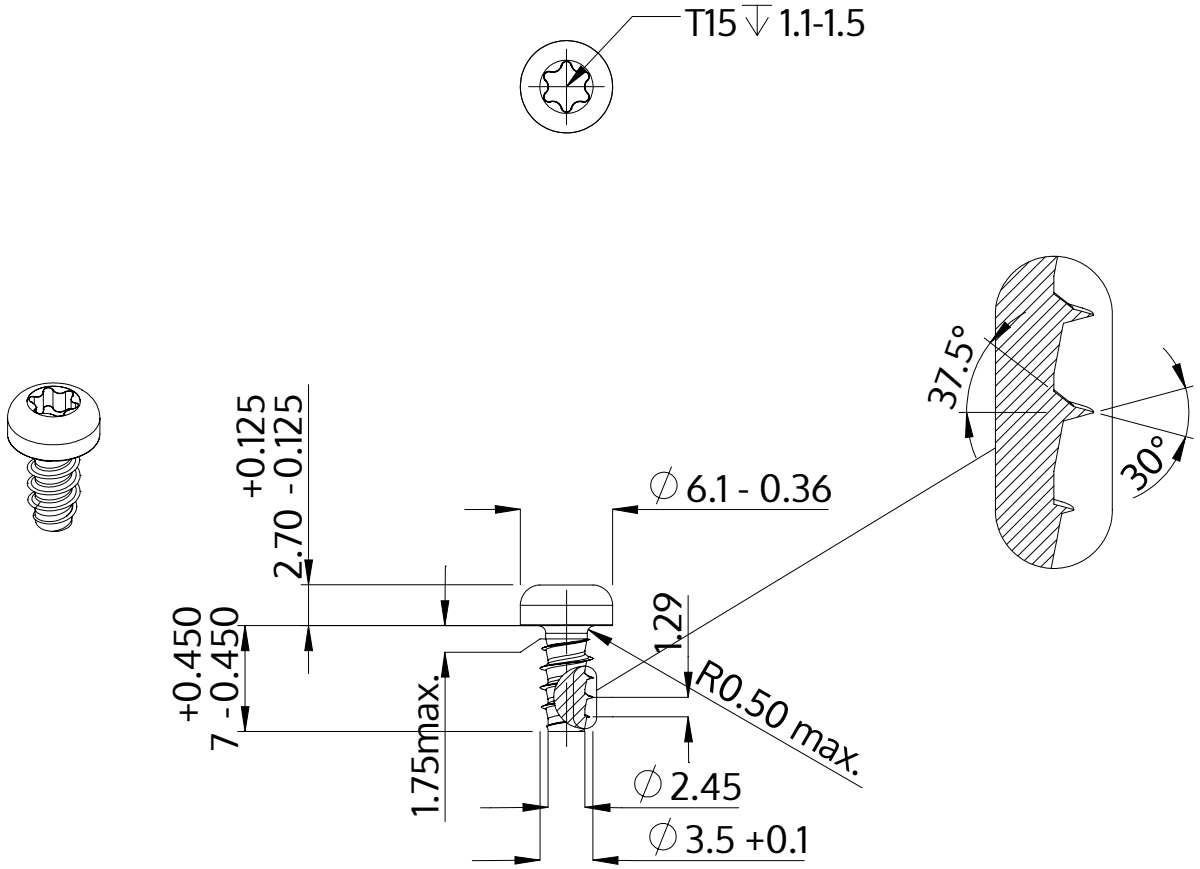

Description	STP39 3.5x7.0 - T15
Material	stainless-steel A2
Surface	bright, pickled and passivated
Weight	0.771 kg / 1000 pieces

SCREWERK	**STP390350070E**	
Metric Drawing A4	Scale 2:1	2024-10