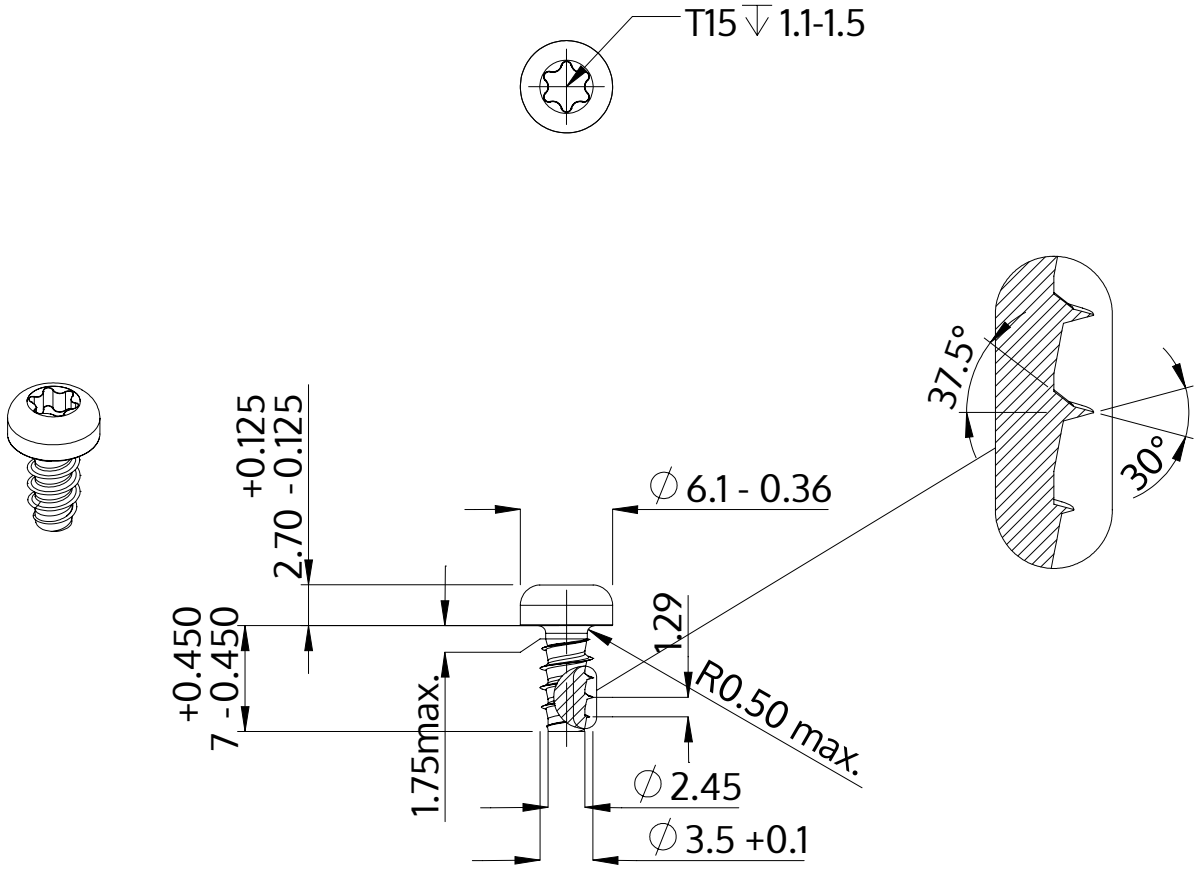

Description	STP39 3.5x7.0 - T15
Material	steel, hardened
Surface	Zinc-Nickel-plated min. 5µm, passivated black/ Cr-VI-free, baked, sealed
Weight	0.771 kg / 1000 pieces

SCREWERK	**STP390350070B**	
Metric Drawing A4	Scale None:1	2024-05