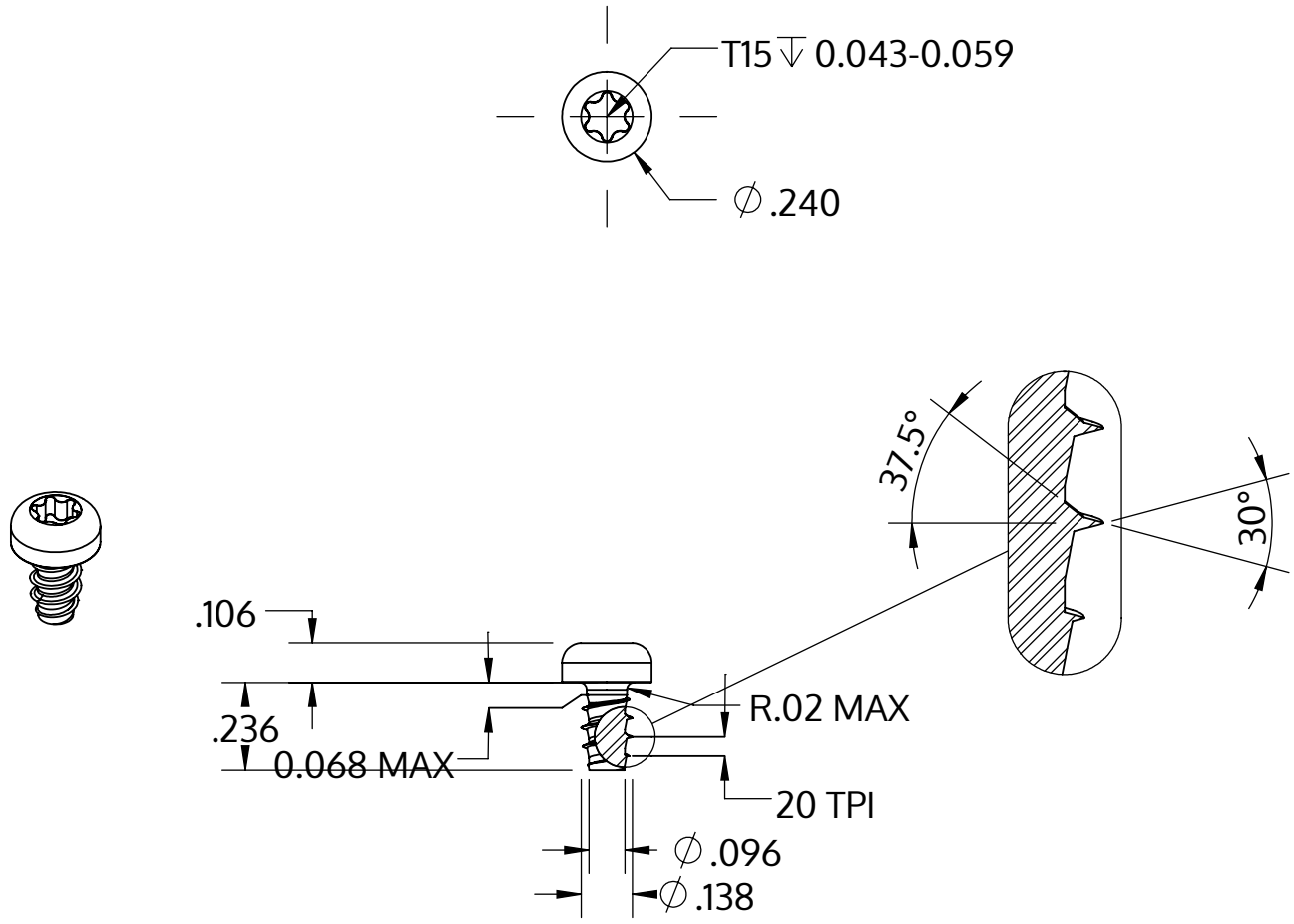

Metric size	M3.5 x 1.29 mm
US size (converted)	#6-20
	Tolerances [inch]
Length	+/- 0.014
Head diameter	+0 / -0.014
Head height	+/- 0.004
Thread diameter	+0.003 / -0

Beskrivning	STP39 3.5x6.0 - T15
Material	rostfritt stål A2
Yta	svart
Vikt	0.723 kg / 1000 styck

SCREWERK	**STP390350060J**	
_Zoll Zeichnung Größe A	Skala 2:1	2024-10