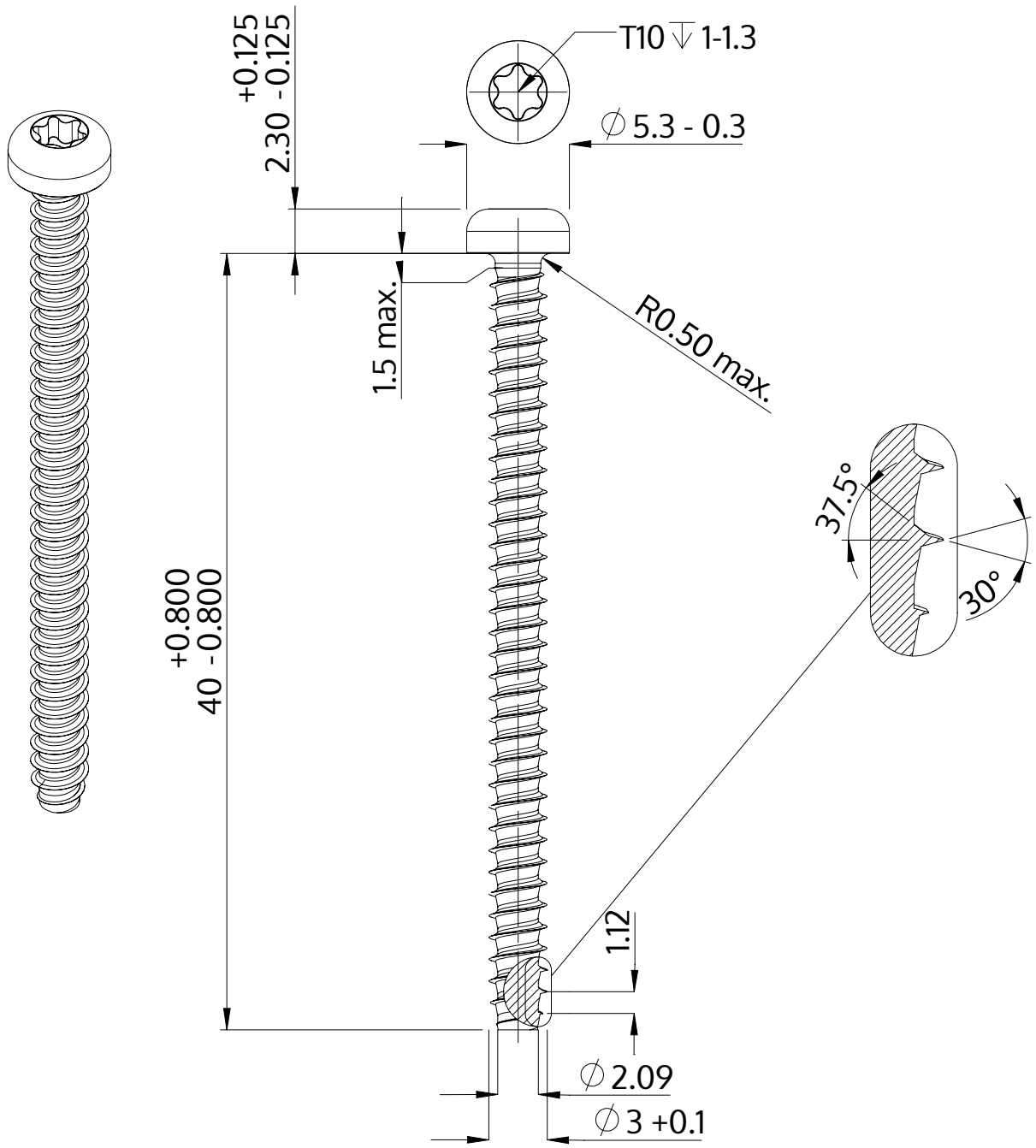

Description	STP39 3.0x40.0 - T10
Material	stainless steel A4
Surface	bright, pickled and passivated
Weight	1.642 kg / 1000 pieces

SCREWERK	**STP390300400C**	
Metric Drawing A4	Scale 3:1	2024-10