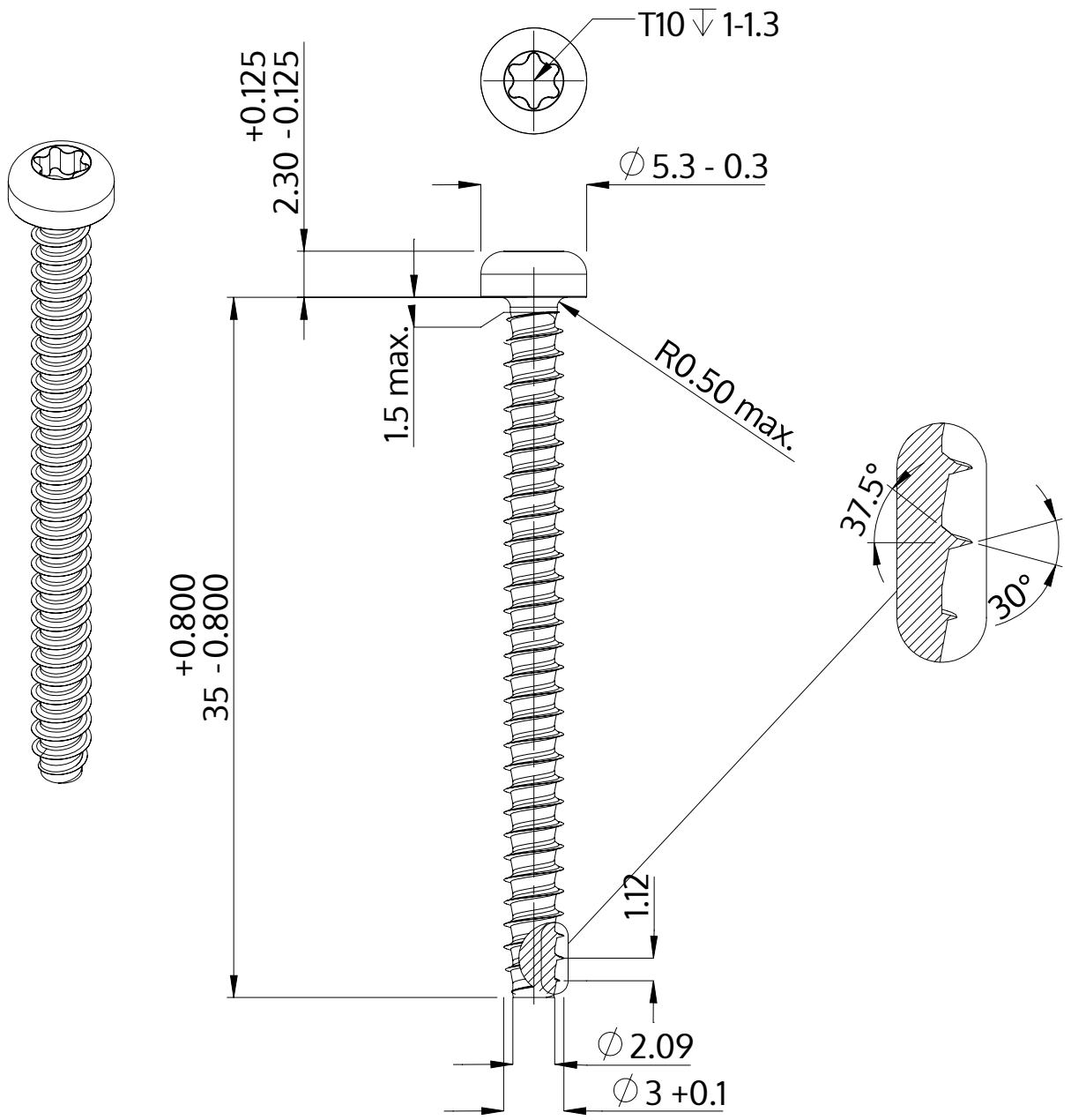

Description	STP39 3.0x35.0 - T10
Material	stainless-steel A2
Surface	bright, pickled and passivated
Weight	1.472 kg / 1000 pieces

SCREWERK	**STP390300350E**	
Metric Drawing A4	Scale 3:1	2024-10