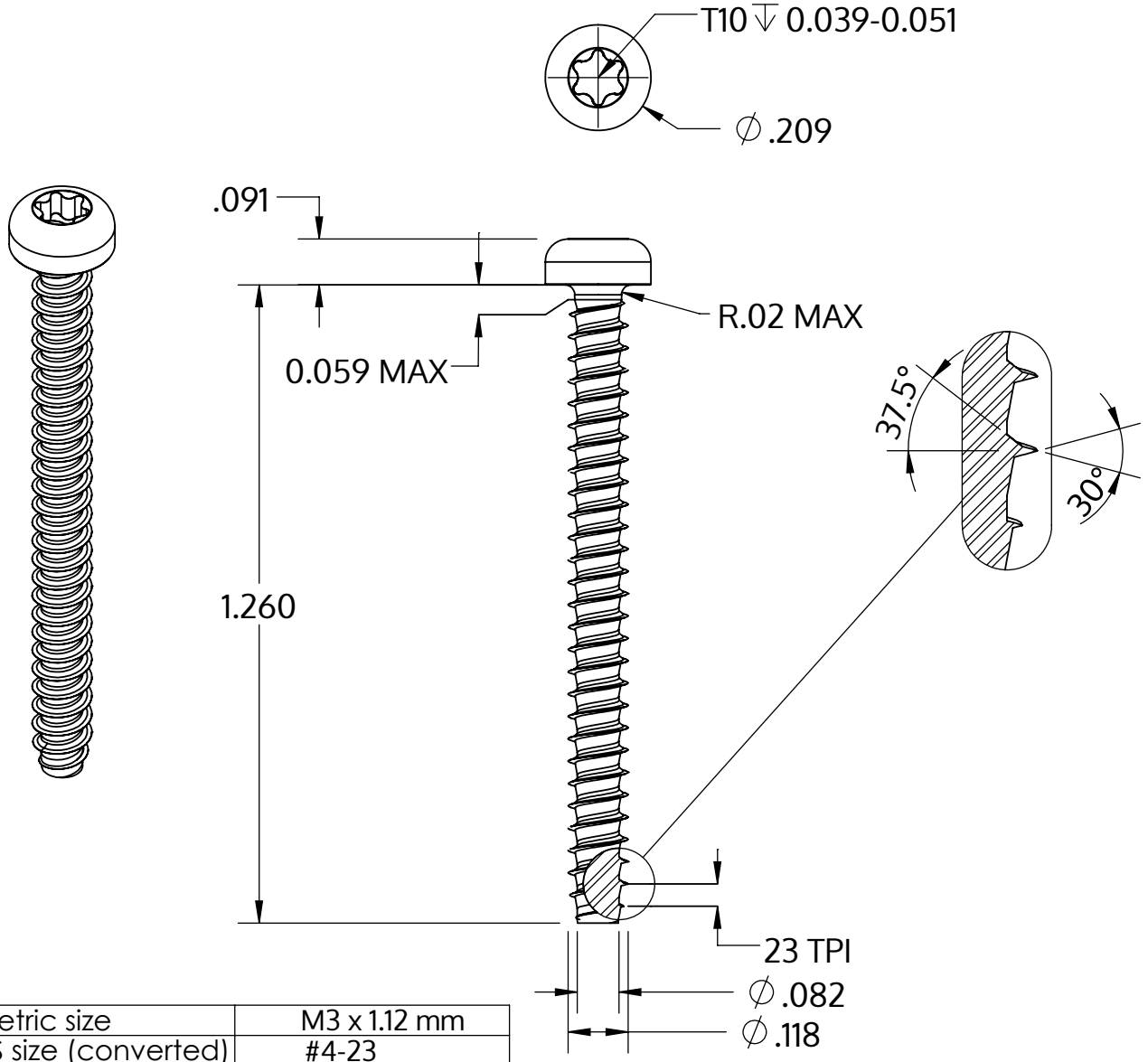


| | |
|---|---|
| Metric size | M3 x 1.12 mm |
| US size (converted) | #4-23 |
| | Tolerances [inch] |
| Length | +/- 0.031 |
| Head diameter | +0 / -0.011 |
| Head height | +/- 0.004 |
| Thread diameter | +0.003 / -0 |

| | |
|---|---|
| Descriere | STP39 3.0x32.0 - T10 |
| Material | oțel, călit |
| Exterior | zincat, Nichelat, pasivat negru / nu conține Cr-VI, recopt, ermetizat |
| Greutate | 1.370 kg / 1000 unități |

| | | |
|---|---|---|
| SCREWERK | **STP390300320B** | |
| _Zoll Zeichnung Größe A | Scalarea 3:1 | 2024-10 |