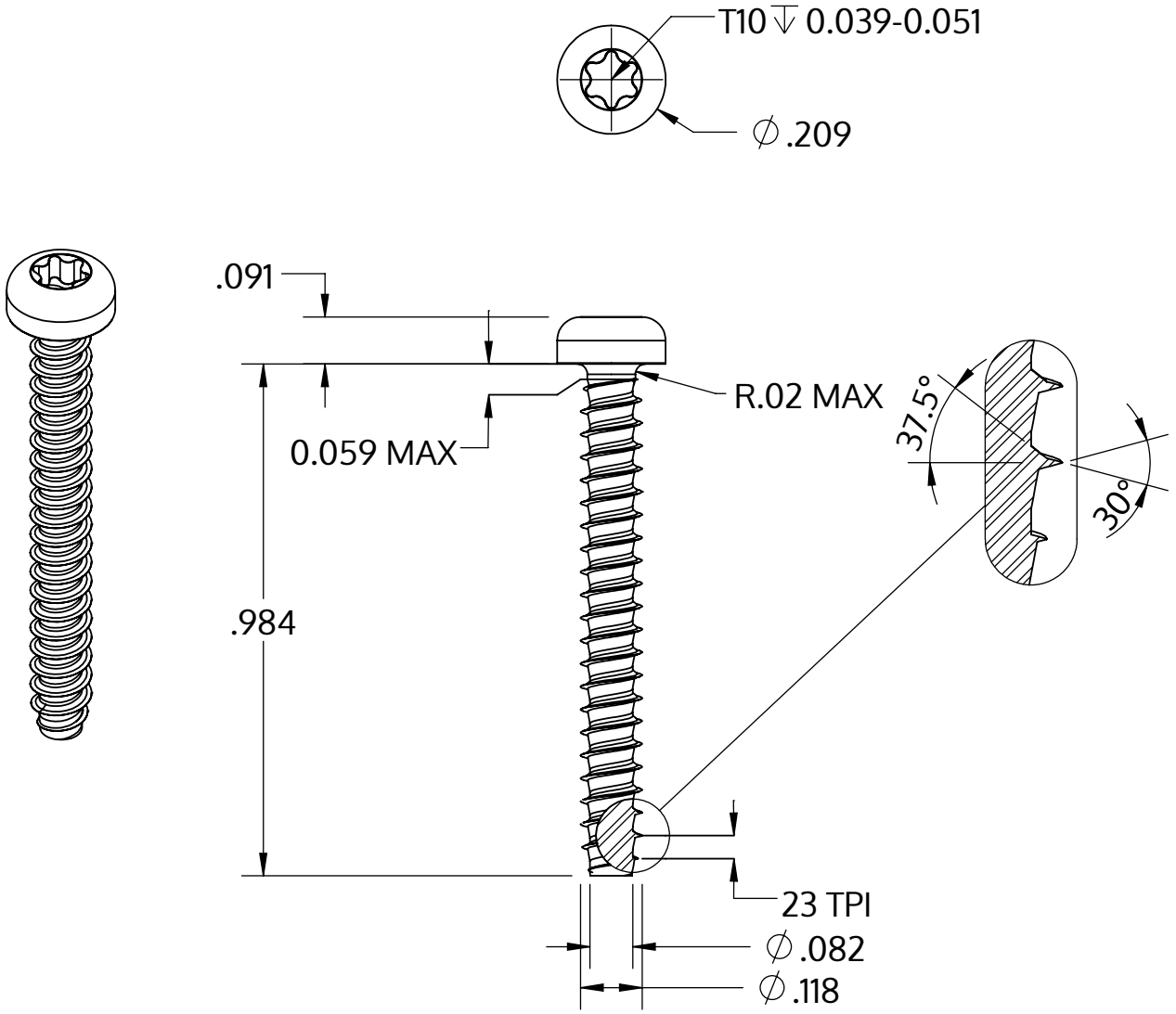


| | |
|---|---|
| Metric size | M3 x 1.12 mm |
| US size (converted) | #4-23 |
| | Tolerances [inch] |
| Length | +/- 0.025 |
| Head diameter | +0 / -0.011 |
| Head height | +/- 0.004 |
| Thread diameter | +0.003 / -0 |

| | |
|---|---|
| Beskrivelse | STP39 3.0x25.0 - T10 |
| Materiale | Ædelstål A4 |
| Overflade | blank, bejdset og passiveret |
| Vægt | 1.132 kg / 1000 stykke |

| | | |
|---|---|---|
| SCREWERK | **STP390300250C** | |
| _Zoll Zeichnung Größe A | Skalering 3:1 | 2024-10 |