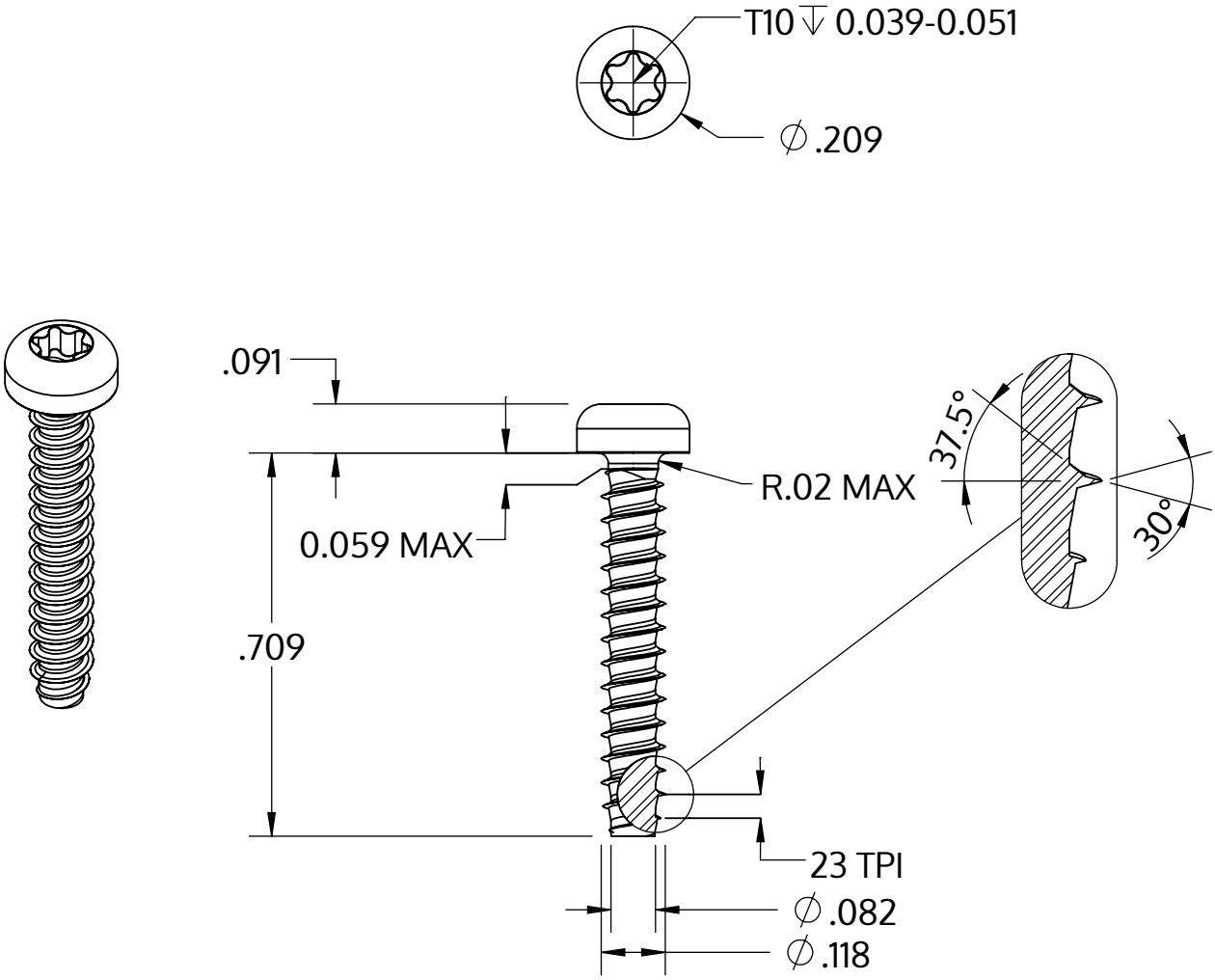

Metric size	M3 x 1.12 mm
US size (converted)	#4-23
	Tolerances [inch]
Length	+/- 0.021
Head diameter	+0 / -0.011
Head height	+/- 0.004
Thread diameter	+0.003 / -0

Description	STP39 3.0x18.0 - T10
Material	steel, hardened
Surface	Zinc-Nickel-plated min. 5µm, passivated black/ Cr-VI-free, baked, sealed
Weight	0.894 kg / 1000 pieces

SCREWERK	**STP390300180B**	
Inch Drawing Size A	Scale 3:1	2024-10