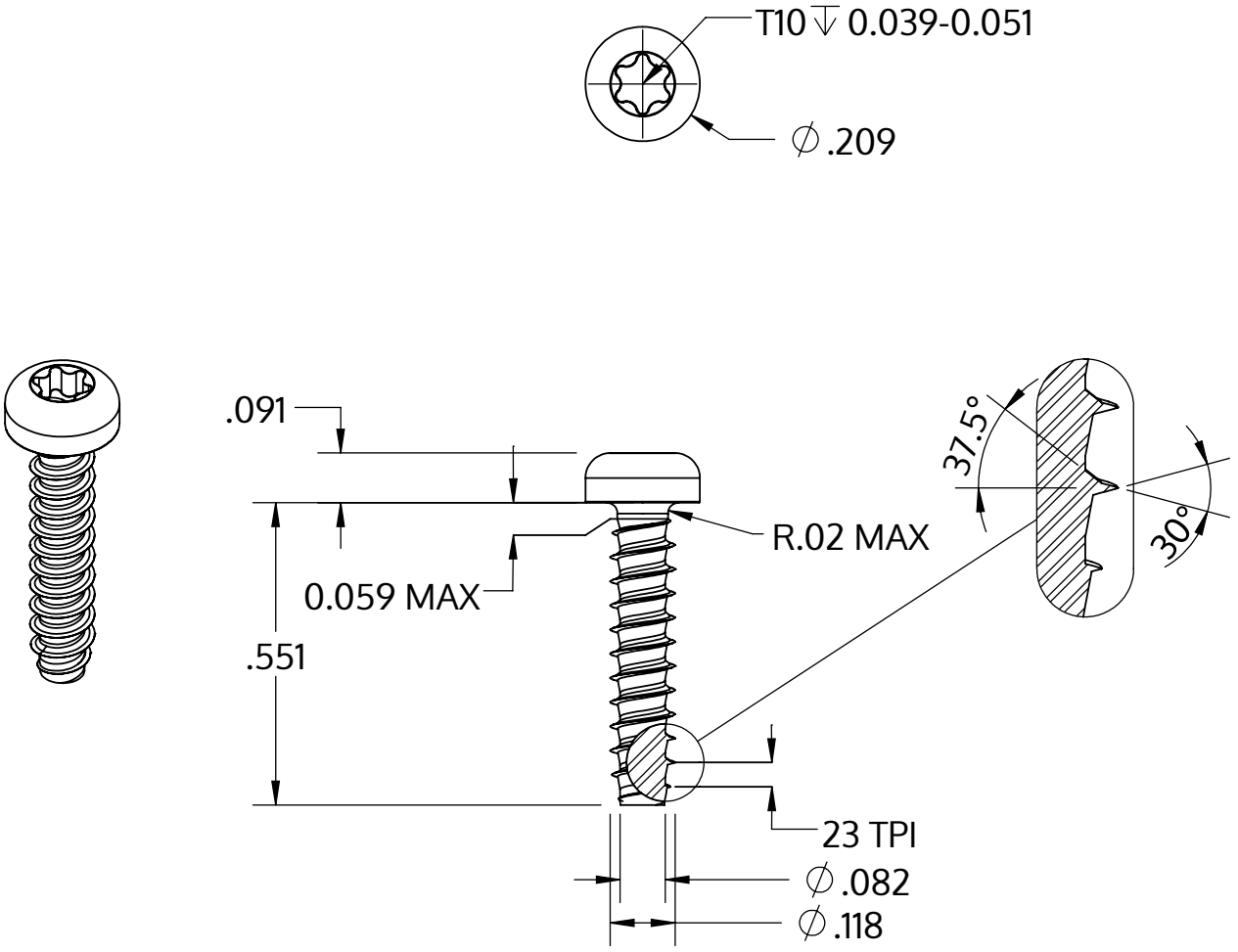

Metric size	M3 x 1.12 mm
US size (converted)	#4-23
	Tolerances [inch]
Length	+/- 0.021
Head diameter	+0 / -0.011
Head height	+/- 0.004
Thread diameter	+0.003 / -0

Descrizione	STP39 3.0x14.0 - T10
Materiale	acciaio inossidabile A2
Superficie	nero
Peso	0.759 kg / 1000 pezzi

SCREWERK	**STP390300140J**	
_Zoll Zeichnung Größe A	Scala 3:1	2024-10