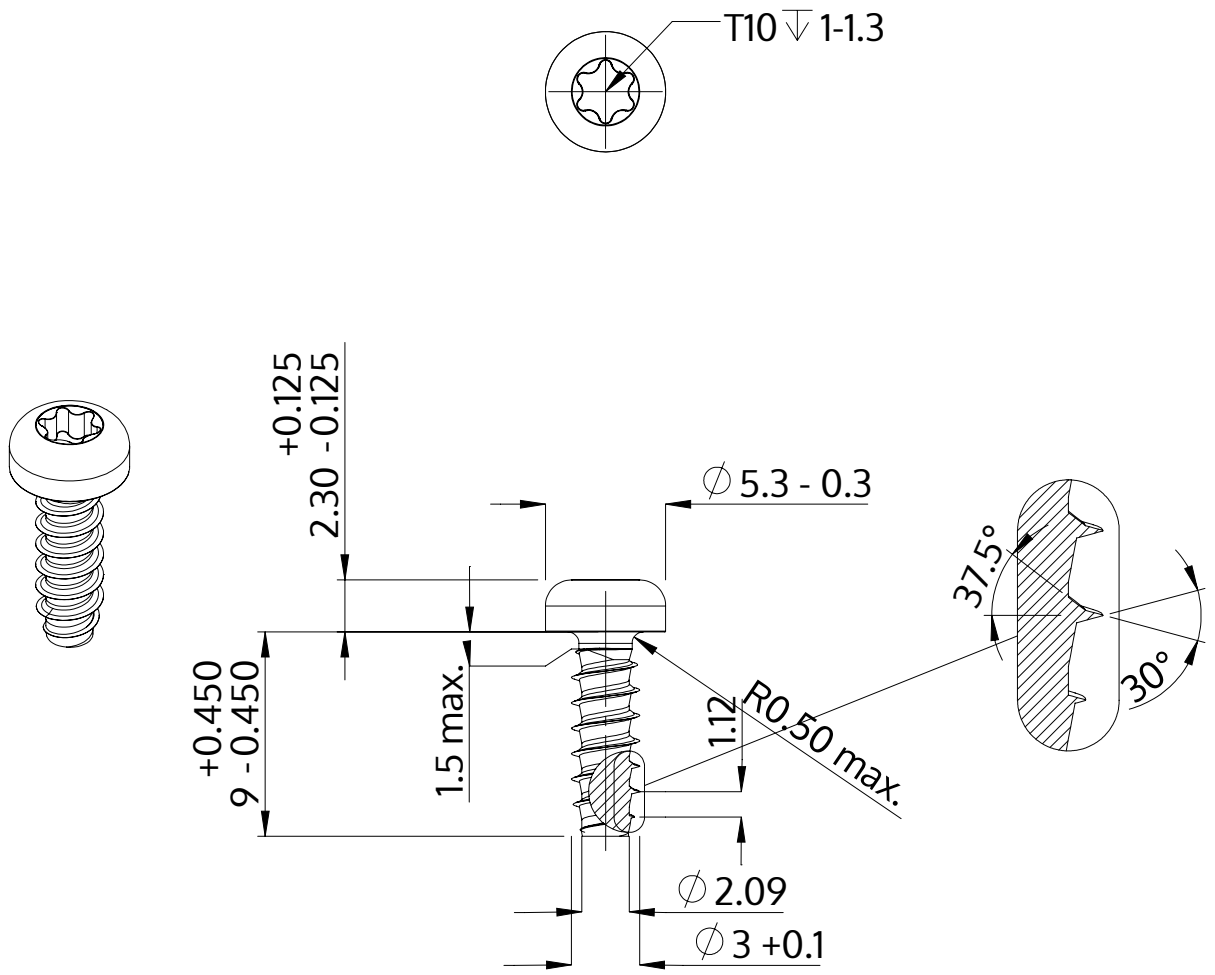

Description	STP39 3.0x9.0 - T10
Material	stainless steel A4
Surface	bright, pickled and passivated
Weight	0.589 kg / 1000 pieces

SCREWERK	**STP390300090C**	
Metric Drawing A4	Scale None:1	2024-04