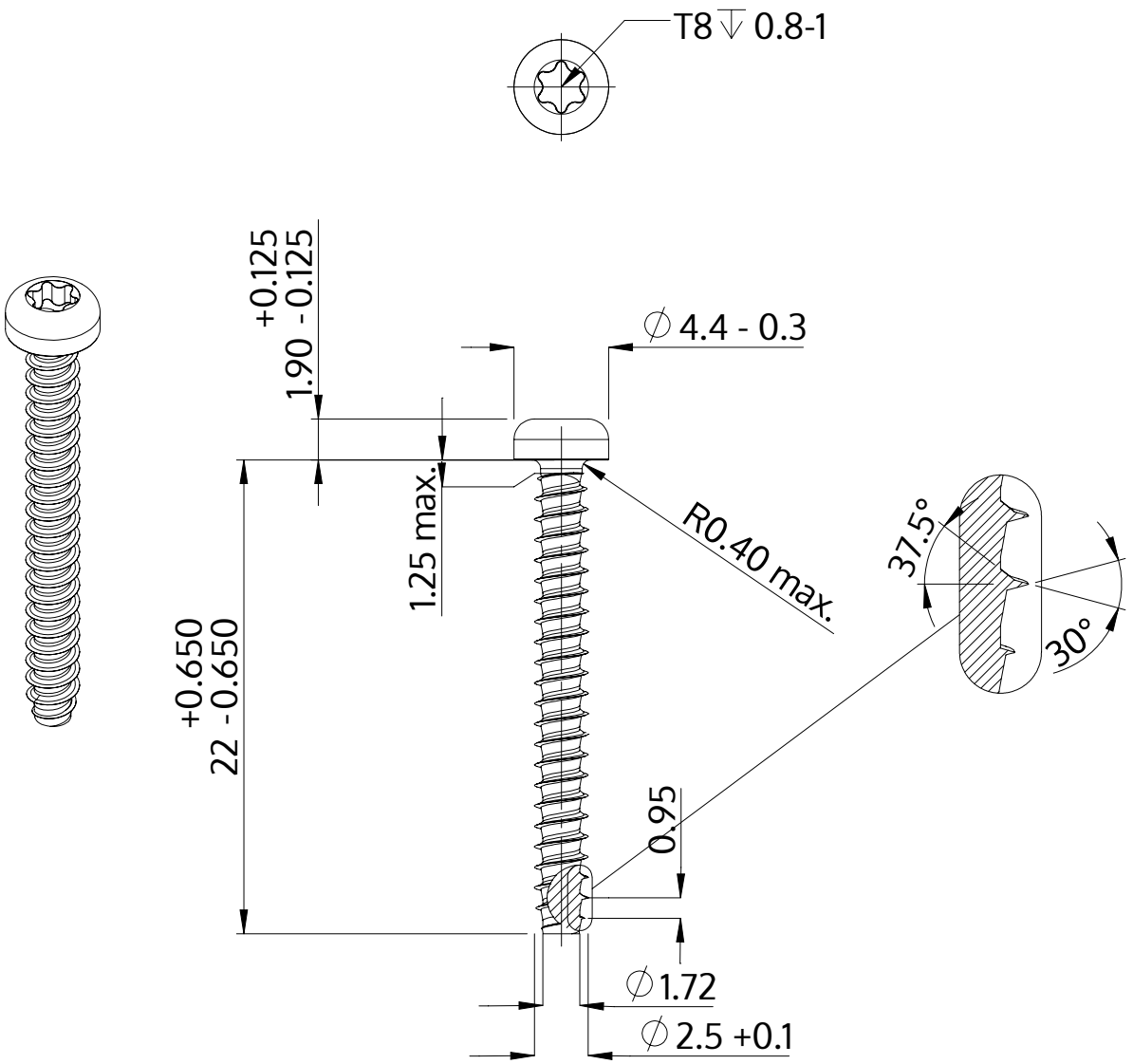

Description	STP39 2.5x22.0 - T8
Material	stainless-steel A2
Surface	bright, pickled and passivated
Weight	0.691 kg / 1000 pieces

SCREWERK	**STP390250220E**	
Metric Drawing A4	Scale None:1	2024-04