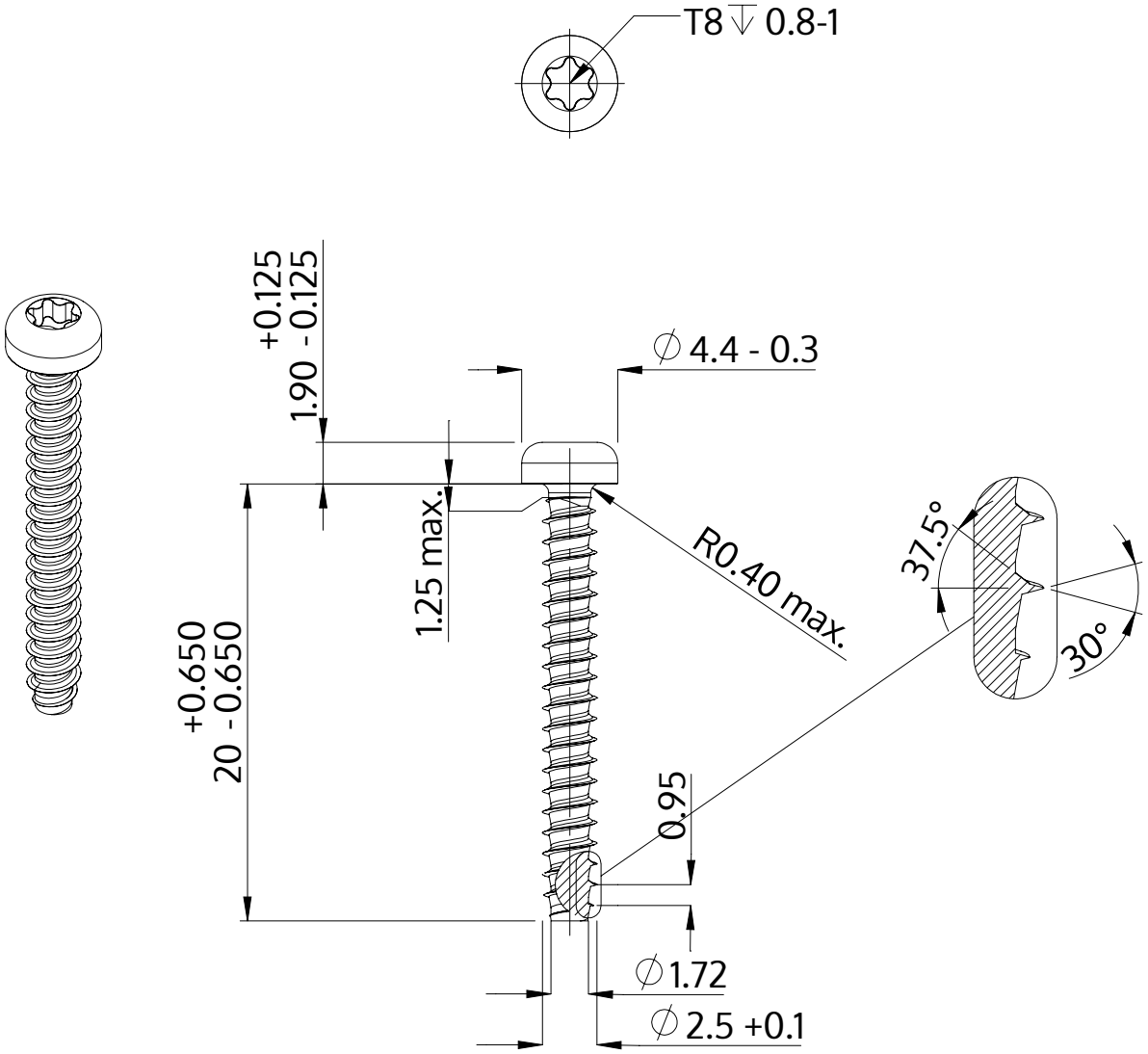

Description	STP39 2.5x20.0 - T8
Material	steel, hardened
Surface	zinc-plated 5-7 µm, baked, blue / transparent passivated
Weight	0.643 kg / 1000 pieces

SCREWERK	**STP390250200S**	
Metric Drawing A4	Scale 3:1	2024-10