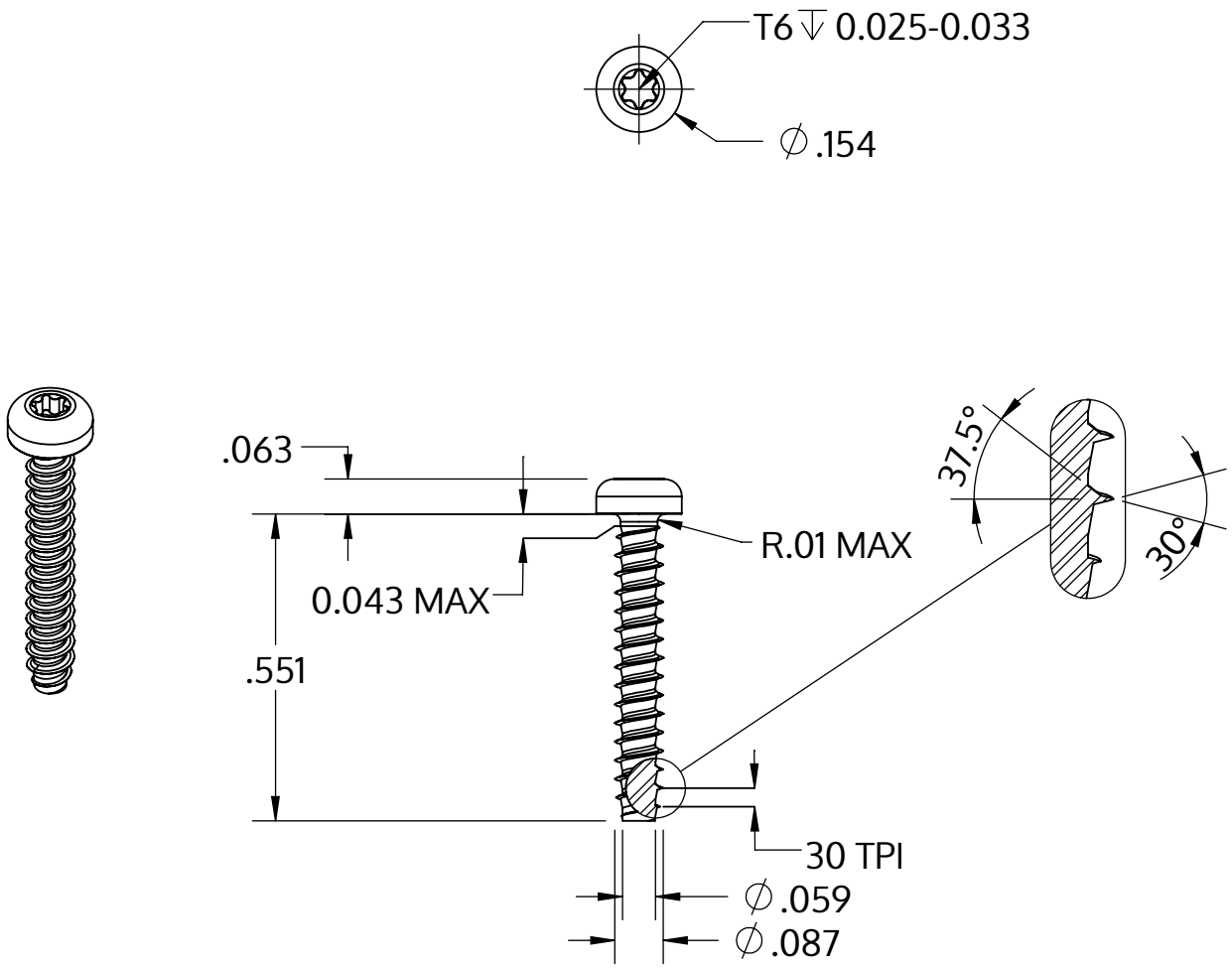


| | |
|---|---|
| Metric size | M2.2 x 0.85 mm |
| US size (converted) | #2-30 |
| | Tolerances [inch] |
| Length | +/- 0.021 |
| Head diameter | +0 / -0.011 |
| Head height | +/- 0.004 |
| Thread diameter | +0.003 / -0 |

| | |
|---|---|
| Beschrijving | STP39 2.2x14.0 - T6 |
| Materiaal | veredeld staal |
| Oppervlak | ZnNi zwart-gepassiveerd, getempert, verzegeld |
| Gewicht | 0.365 kg / 1000 stuk |

| | | |
|---|---|---|
| SCREWERK | **STP390220140B** | |
| _Zoll Zeichnung Größe A | Schaal 3:1 | 2024-10 |