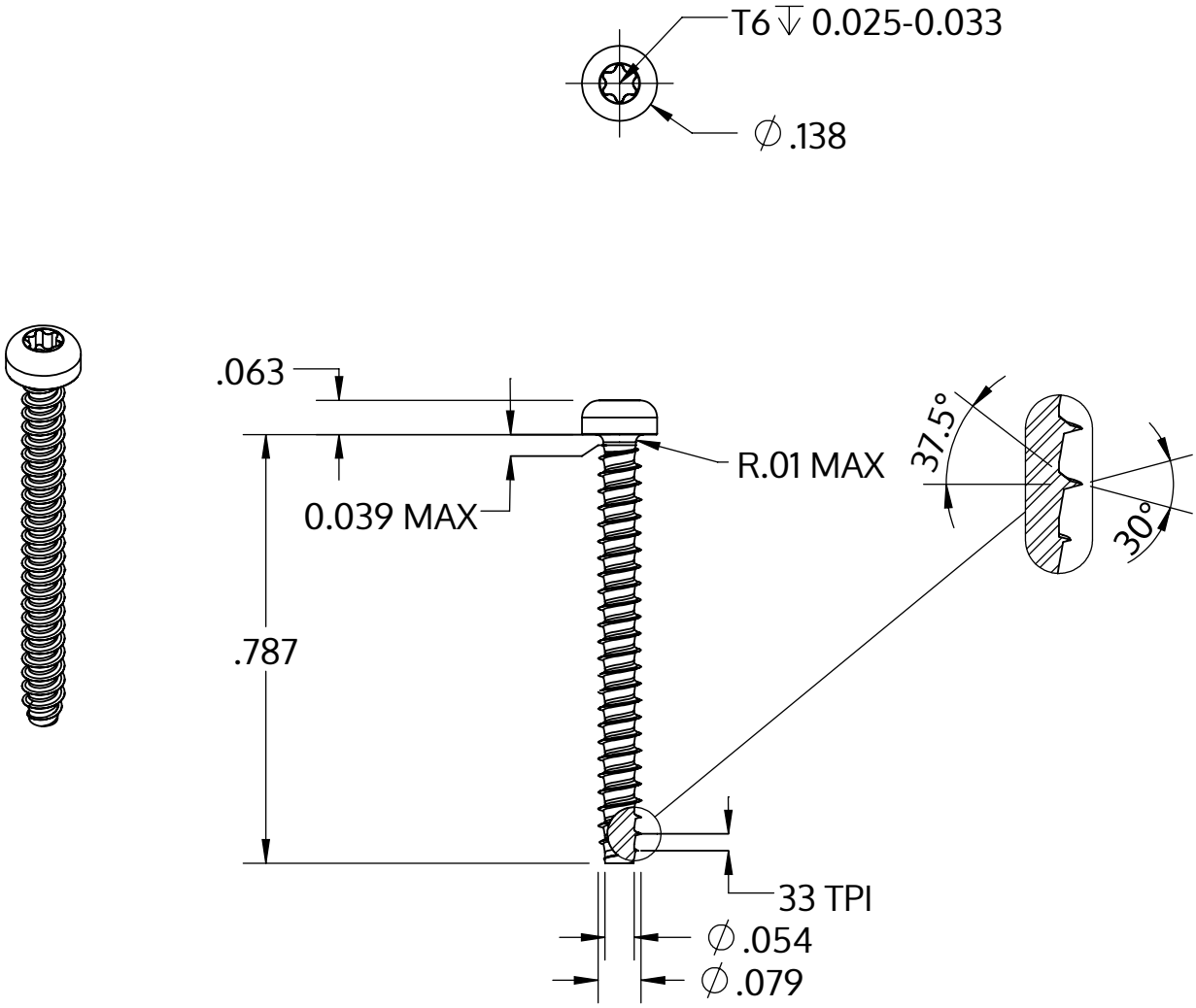

Metric size	M2 x 0.78 mm
US size (converted)	#1.5-33
	Tolerances [inch]
Length	+/- 0.025
Head diameter	+0 / -0.011
Head height	+/- 0.004
Thread diameter	+0.003 / -0

Descrizione	STP39 2.0x20.0 - T6
Materiale	acciaio inossidabile A2
Superficie	bianco-decapato e passivato
Peso	0.394 kg / 1000 pezzi

SCREWERK	**STP390200200E**	
_Zoll Zeichnung Größe A	Scala 3:1	2024-05