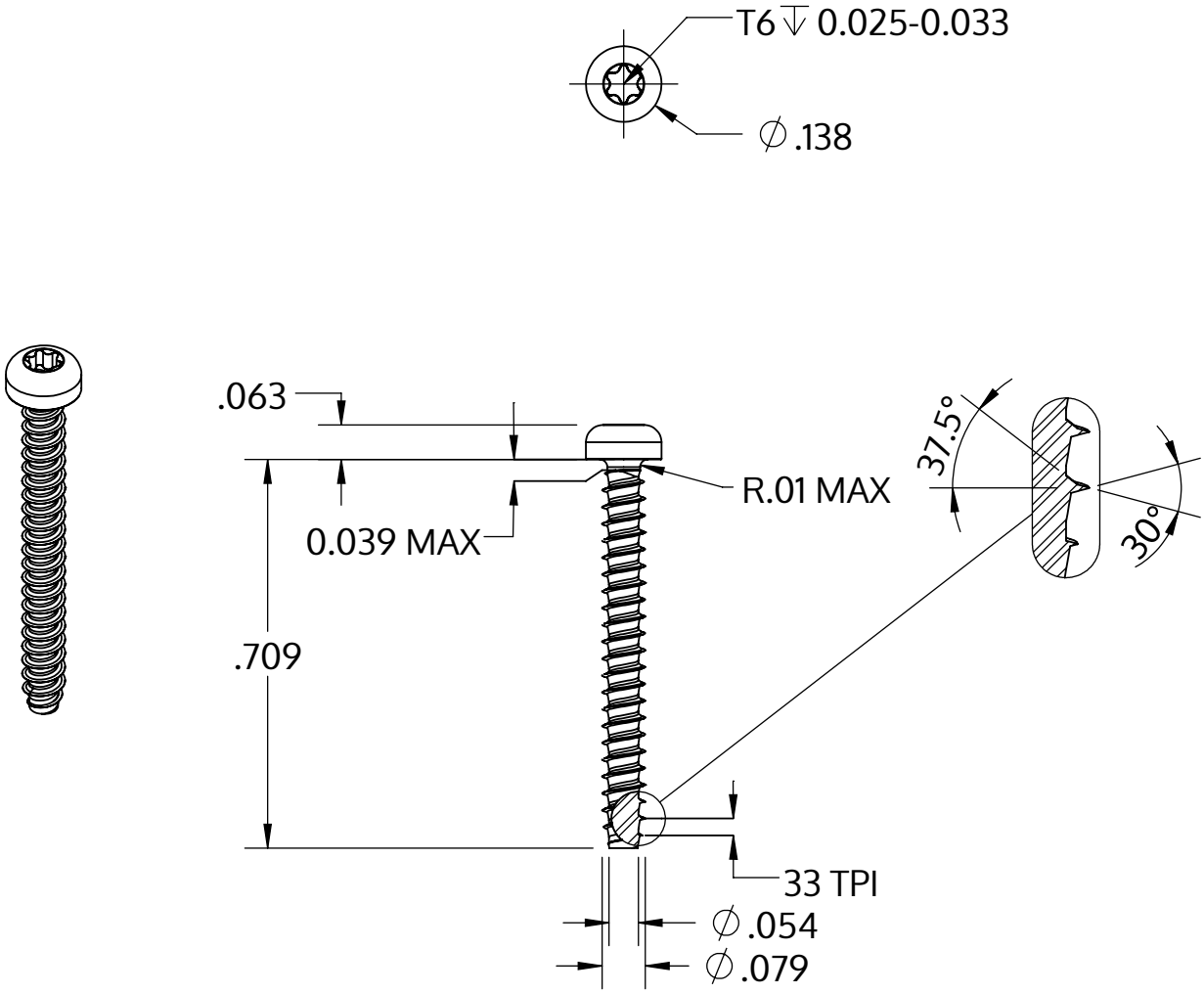


| | |
|---|---|
| Metric size | M2 x 0.78 mm |
| US size (converted) | #1.5-33 |
| | Tolerances [inch] |
| Length | +/- 0.021 |
| Head diameter | +0 / -0.011 |
| Head height | +/- 0.004 |
| Thread diameter | +0.003 / -0 |

| | |
|---|---|
| Popis | STP39 2.0x18.0 - T6 |
| Materiál | Nerezová ocel A2 |
| Povrch | holá, mořená a pásová ocel |
| Hmotnost | 0.362 kg / 1000 Kus |

| | | |
|---|---|---|
| SCREWERK | **STP390200180E** | |
| _Zoll Zeichnung Größe A | Měřítko 3:1 | 2024-10 |