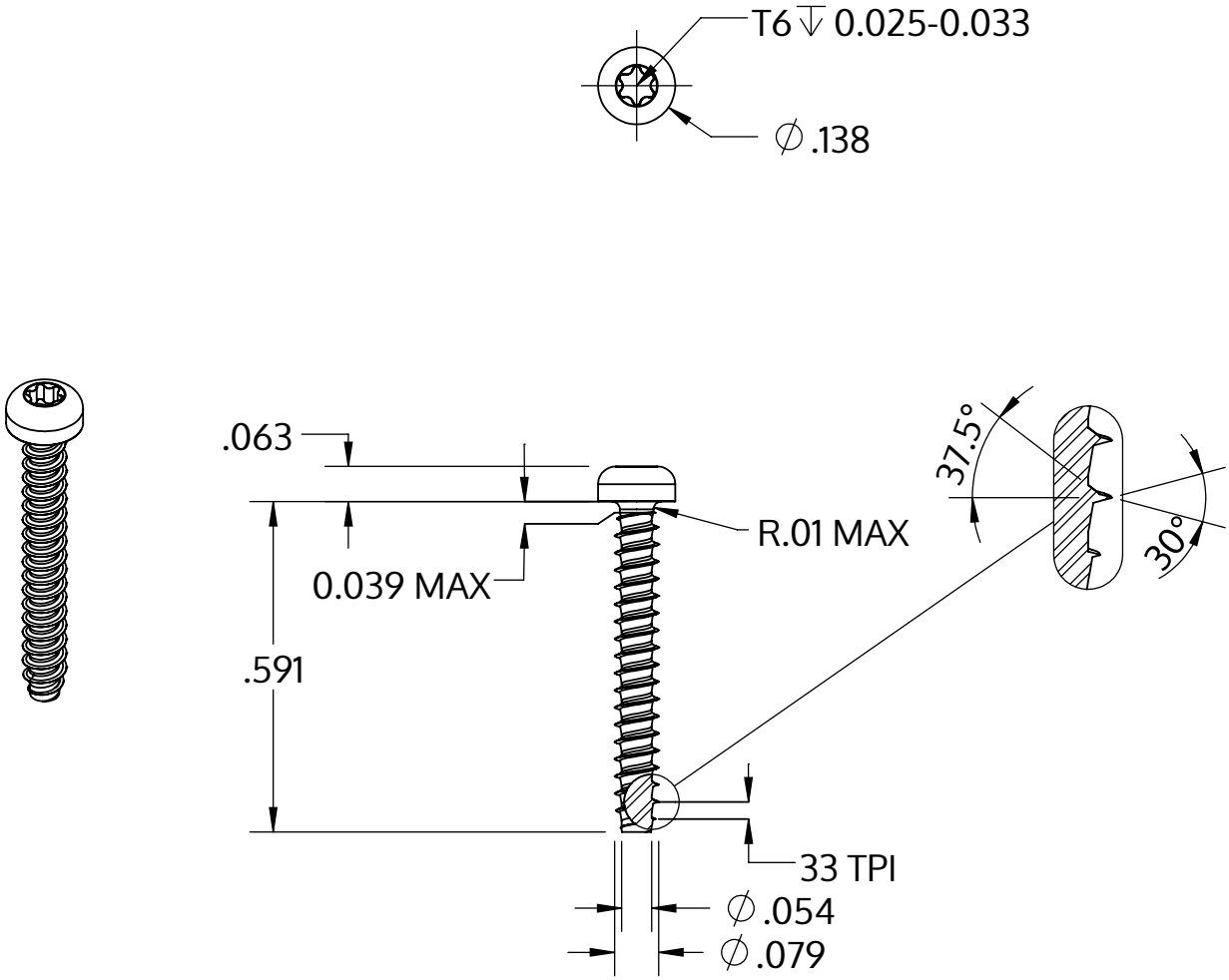

Metric size	M2 x 0.78 mm
US size (converted)	#1.5-33
	Tolerances [inch]
Length	+/- 0.021
Head diameter	+0 / -0.011
Head height	+/- 0.004
Thread diameter	+0.003 / -0

Description	STP39 2.0x15.0 - T6
Material	steel, hardened
Surface	zinc-plated 5-7 µm, baked, blue / transparent passivated
Weight	0.316 kg / 1000 pieces

SCREWERK	**STP390200150S**	
Inch Drawing Size A	Scale 3:1	2024-10