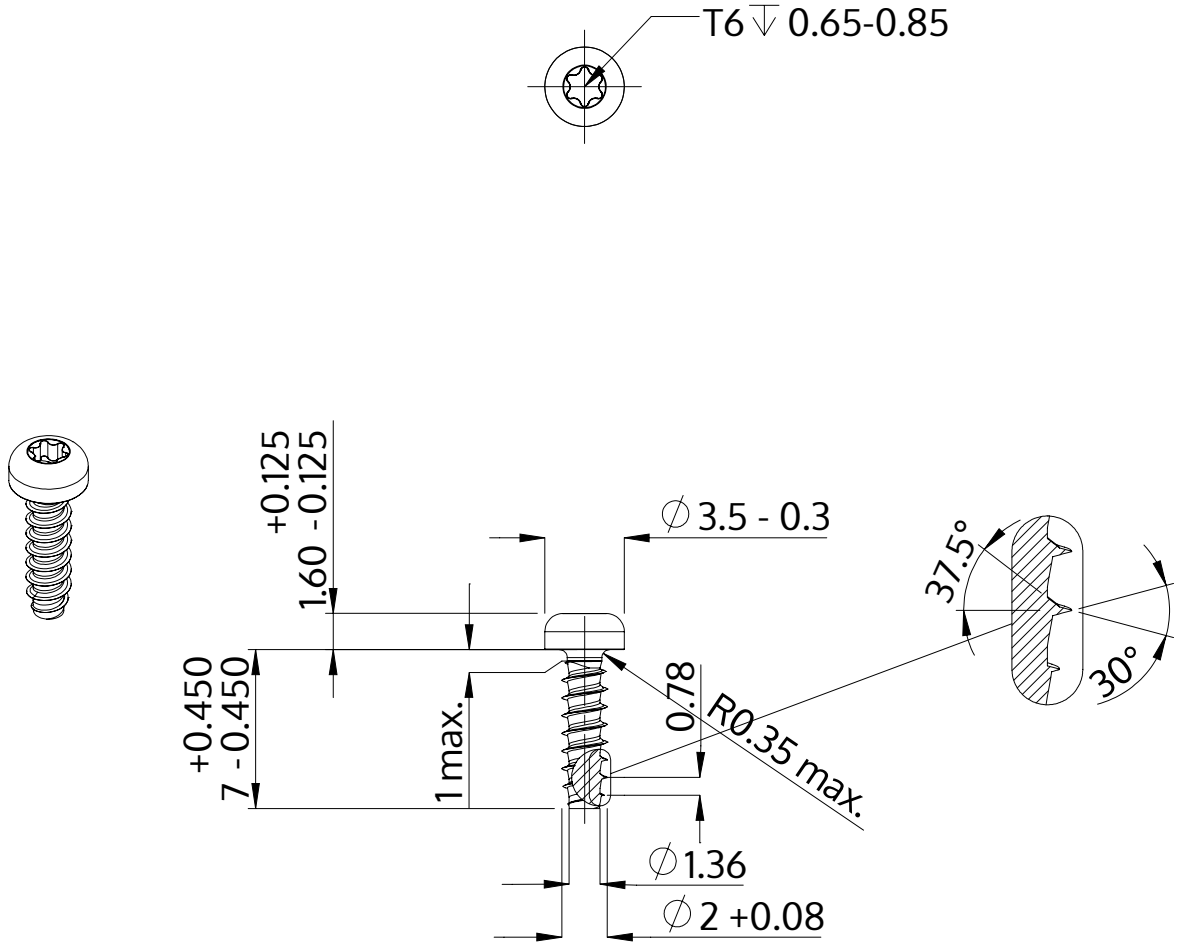

Description	STP39 2.0x7.0 - T6
Material	stainless-steel A2
Surface	bright, pickled and passivated
Weight	0.191 kg / 1000 pieces

SCREWERK	**STP390200070E**	
Metric Drawing A4	Scale 3:1	2024-10