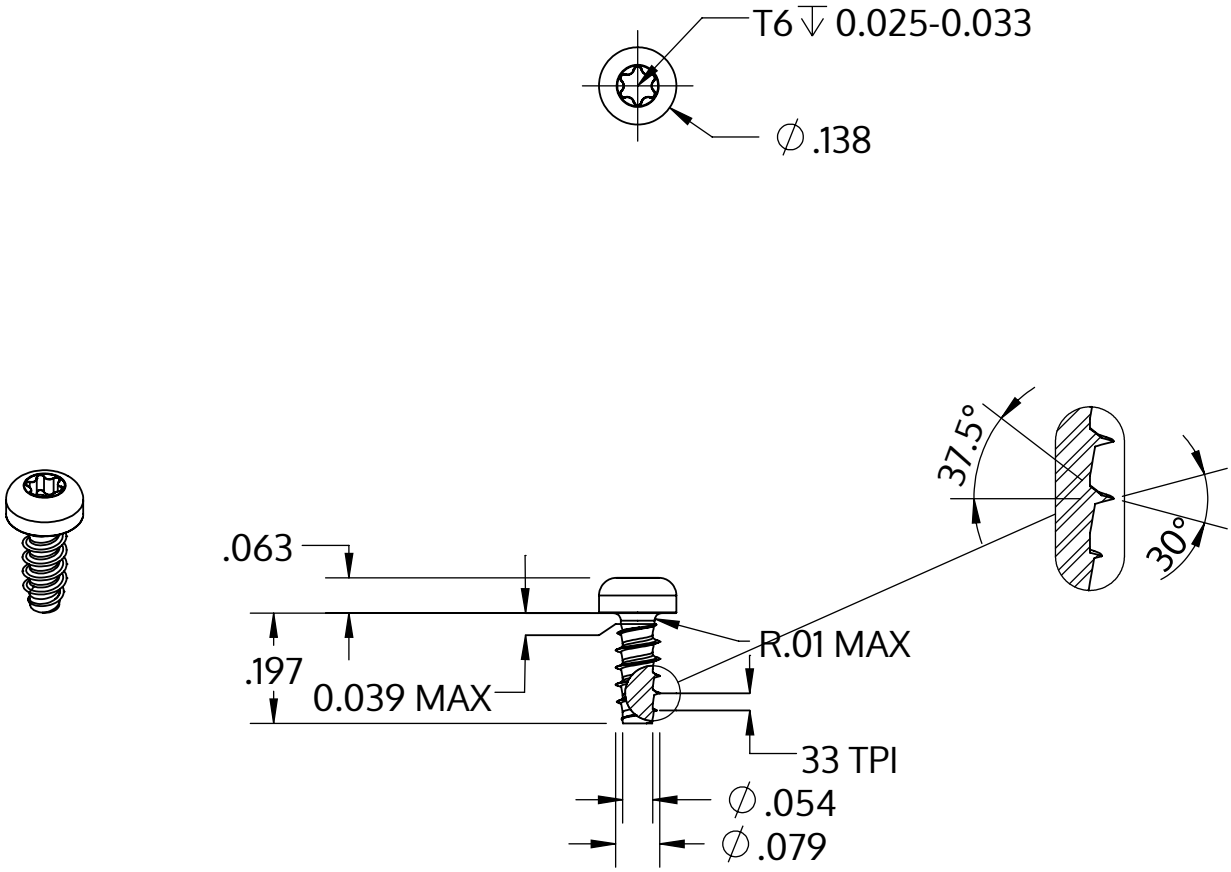

Metric size	M2 x 0.78 mm
US size (converted)	#1.5-33
	Tolerances [inch]
Length	+/- 0.014
Head diameter	+0 / -0.011
Head height	+/- 0.004
Thread diameter	+0.003 / -0

Description	STP39 2.0x5.0 - T6
Material	steel, hardened
Surface	Zinc-Nickel-plated min. 5µm, passivated black/ Cr-VI-free, baked, sealed
Weight	0.159 kg / 1000 pieces

SCREWERK	**STP390200050B**	
Inch Drawing Size A	Scale 3:1	2024-10