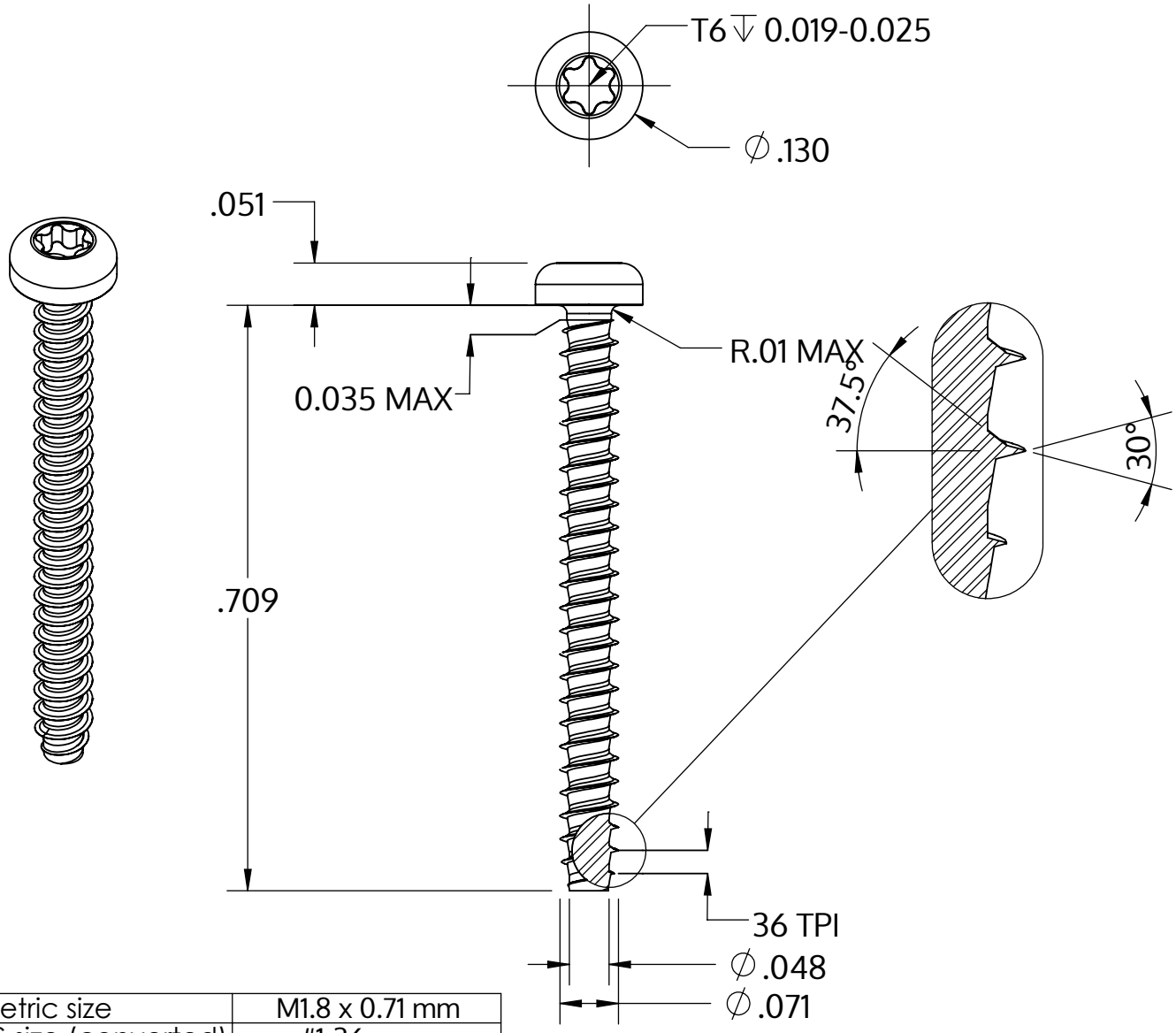

Metric size	M1.8 x 0.71 mm
US size (converted)	#1-36
	Tolerances [inch]
Length	+/- 0.021
Head diameter	+0 / -0.011
Head height	+/- 0.004
Thread diameter	+0.003 / -0

Description	STP39 1.8x18.0 - T6
Material	stainless-steel A2
Surface	bright, pickled and passivated
Weight	0.287 kg / 1000 pieces

SCREWERK	**STP390180180E**	
Inch Drawing Size A	Scale 5:1	2024-10