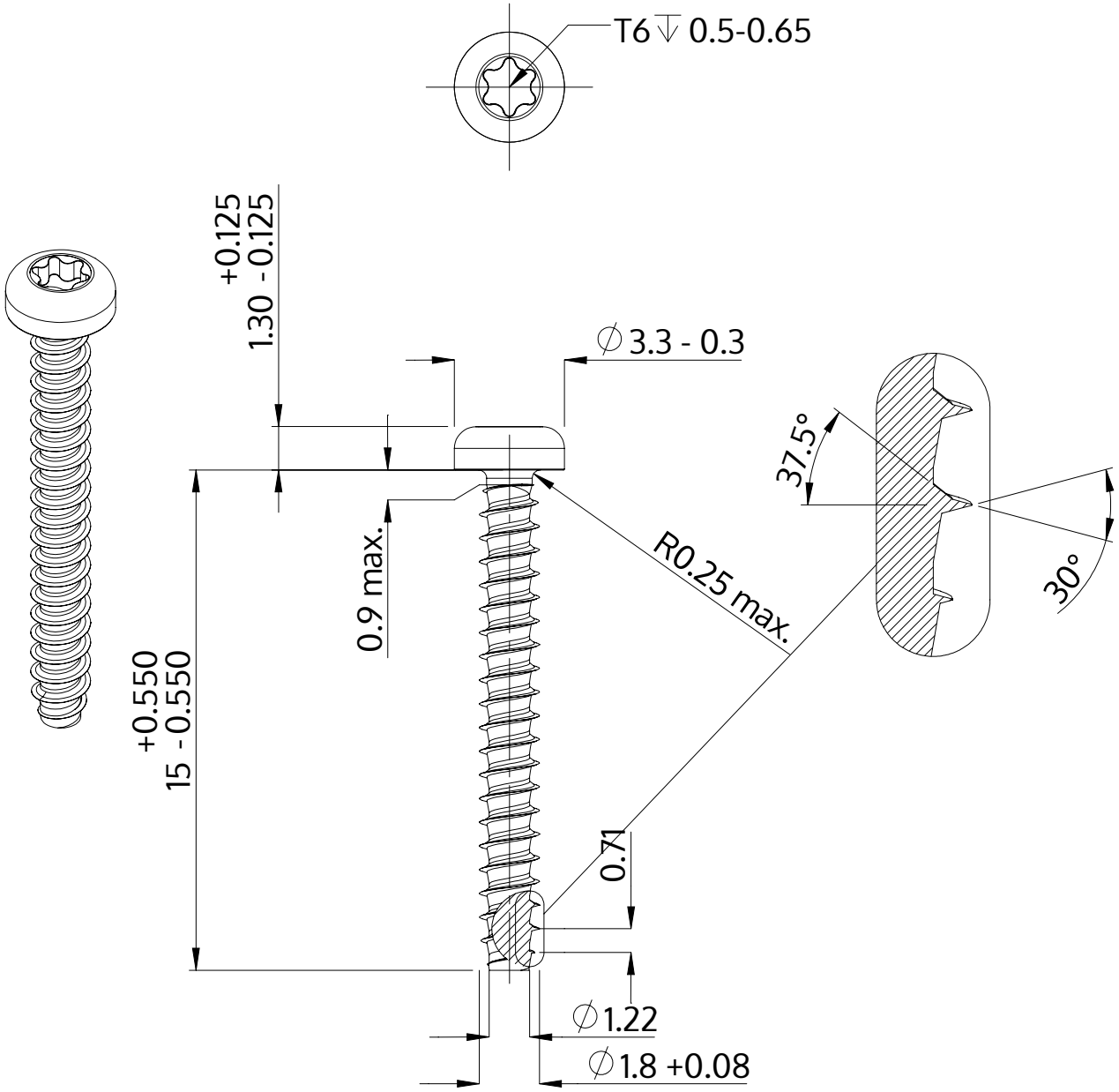


| | |
|---|---|
| Description | STP39 1.8x15.0 - T6 |
| Material | steel, hardened |
| Surface | Zinc-Nickel-plated min. 5µm, passivated black/ Cr-VI-free, baked, sealed |
| Weight | 0.250 kg / 1000 pieces |

| | | |
|---|---|---|
| SCREWERK | **STP390180150B** | |
| Metric Drawing A4 | Scale 5:1 | 2024-10 |