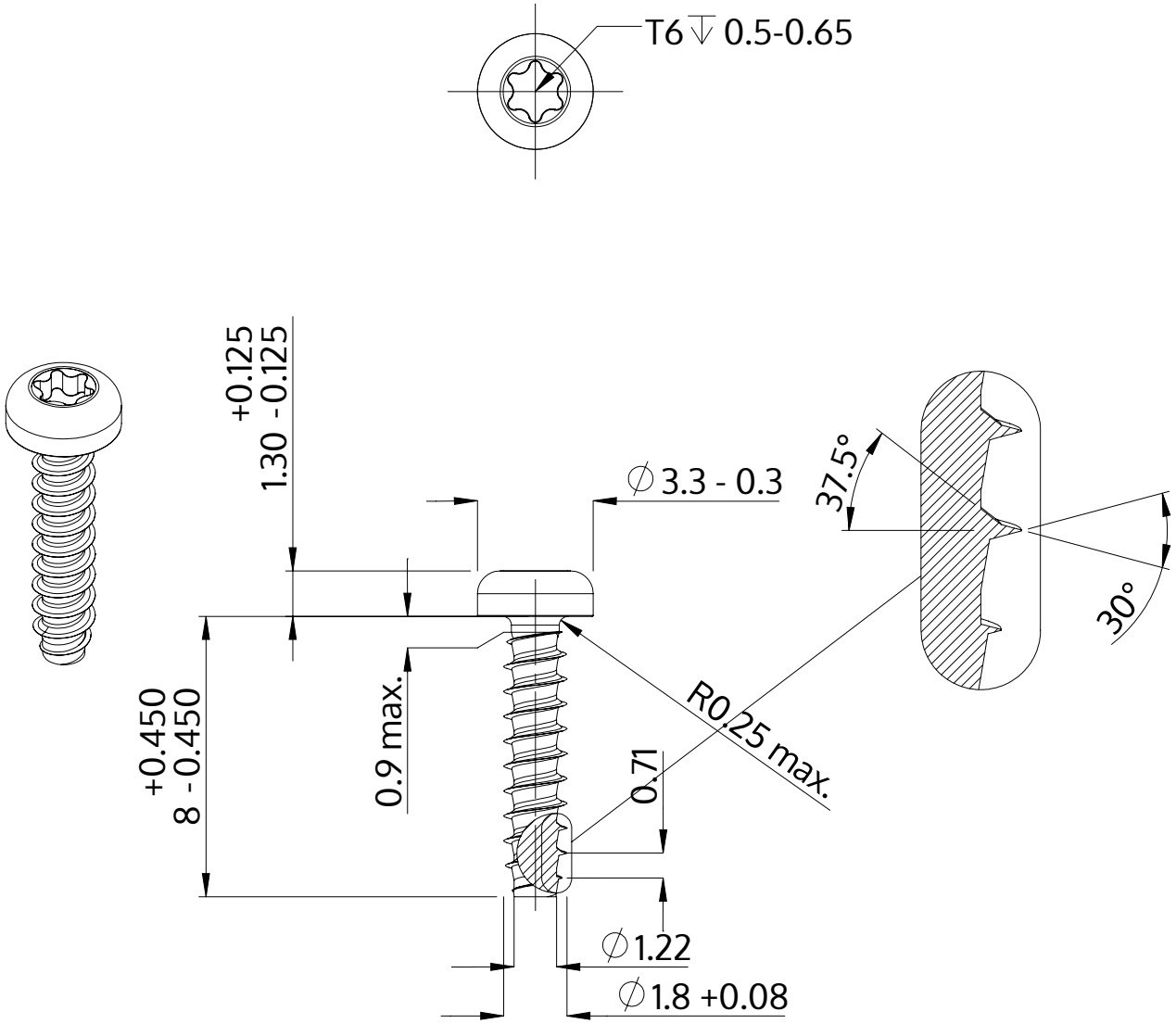

Description	STP39 1.8x8.0 - T6
Material	stainless-steel A2
Surface	bright, pickled and passivated
Weight	0.162 kg / 1000 pieces

SCREWERK	**STP390180080E**	
Metric Drawing A4	Scale 5:1	2024-10