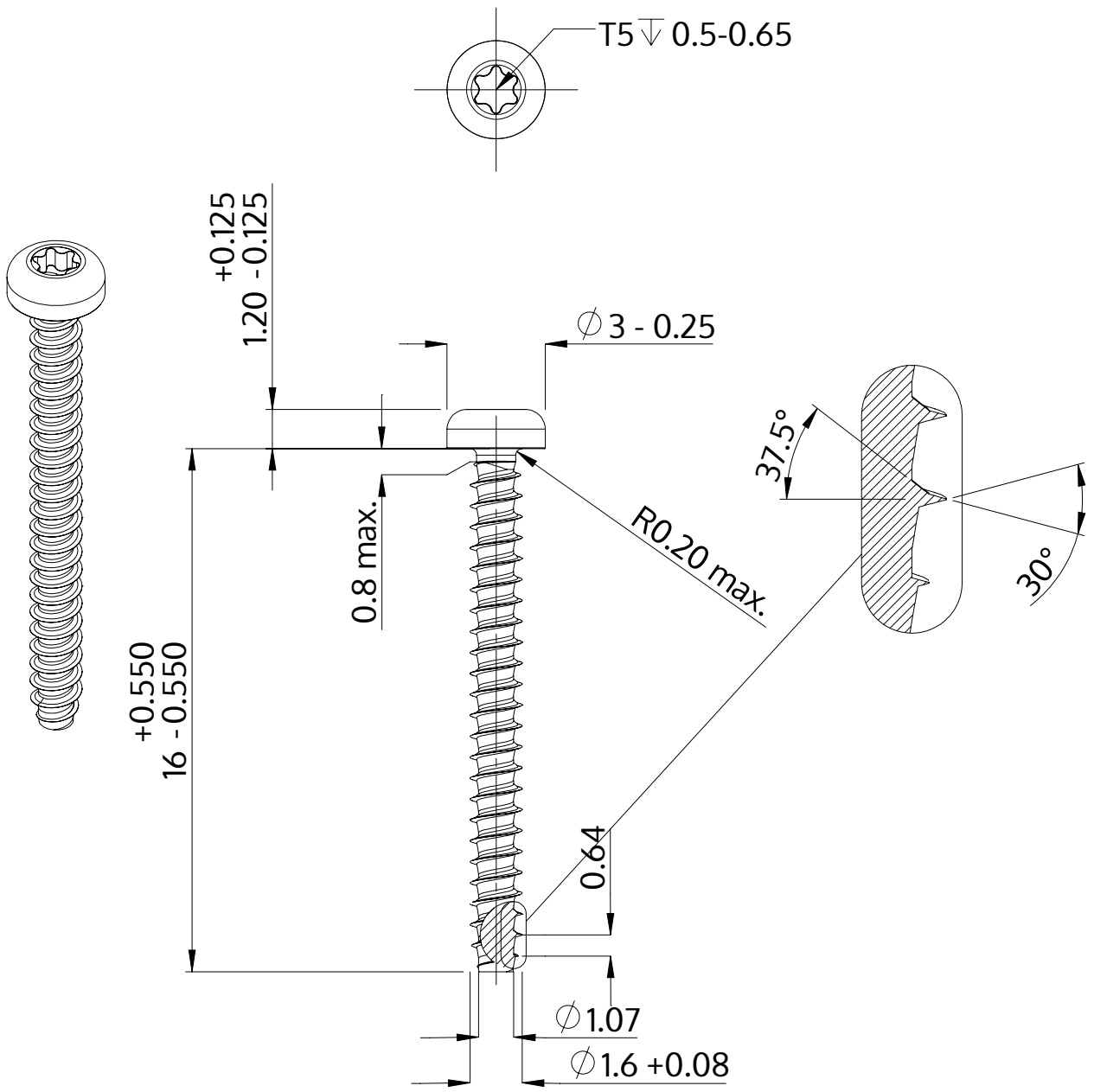

Description	STP39 1.6x16.0 - T5
Material	steel, hardened
Surface	zinc-plated 5-7 µm, baked, blue / transparent passivated
Weight	0.203 kg / 1000 pieces

SCREWERK	**STP390160160S**	
Metric Drawing A4	Scale 5:1	2024-10