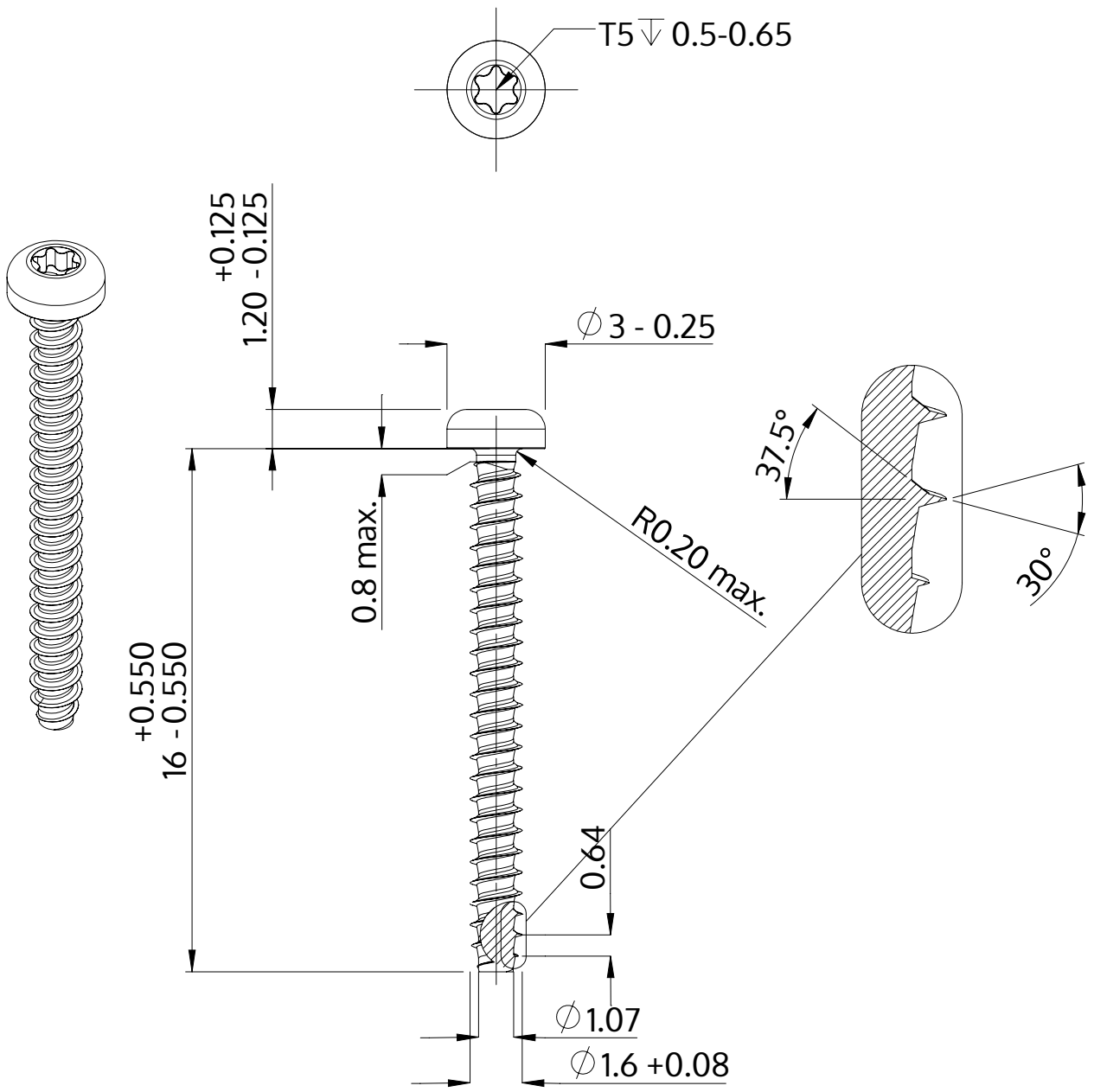

Description	STP39 1.6x16.0 - T5
Material	stainless-steel A2
Surface	bright, pickled and passivated
Weight	0.203 kg / 1000 pieces

SCREWERK	**STP390160160E**	
Metric Drawing A4	Scale 5:1	2024-10