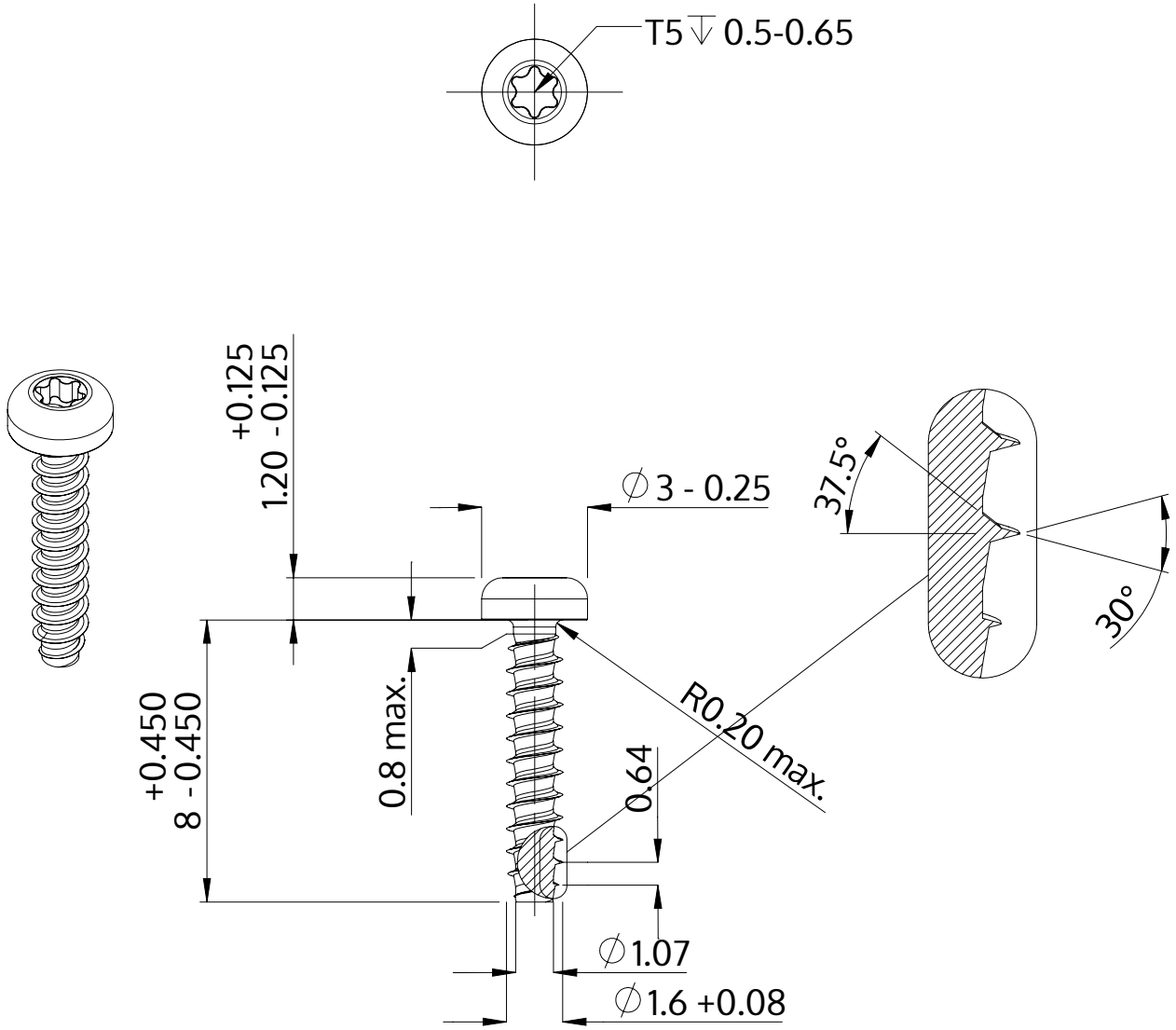


| | |
|---|---|
| Description | STP39 1.6x8.0 - T5 |
| Material | stainless-steel A2 |
| Surface | bright, pickled and passivated |
| Weight | 0.124 kg / 1000 pieces |

| | | |
|---|---|---|
| SCREWERK | **STP390160080E** | |
| Metric Drawing A4 | Scale 5:1 | 2024-10 |