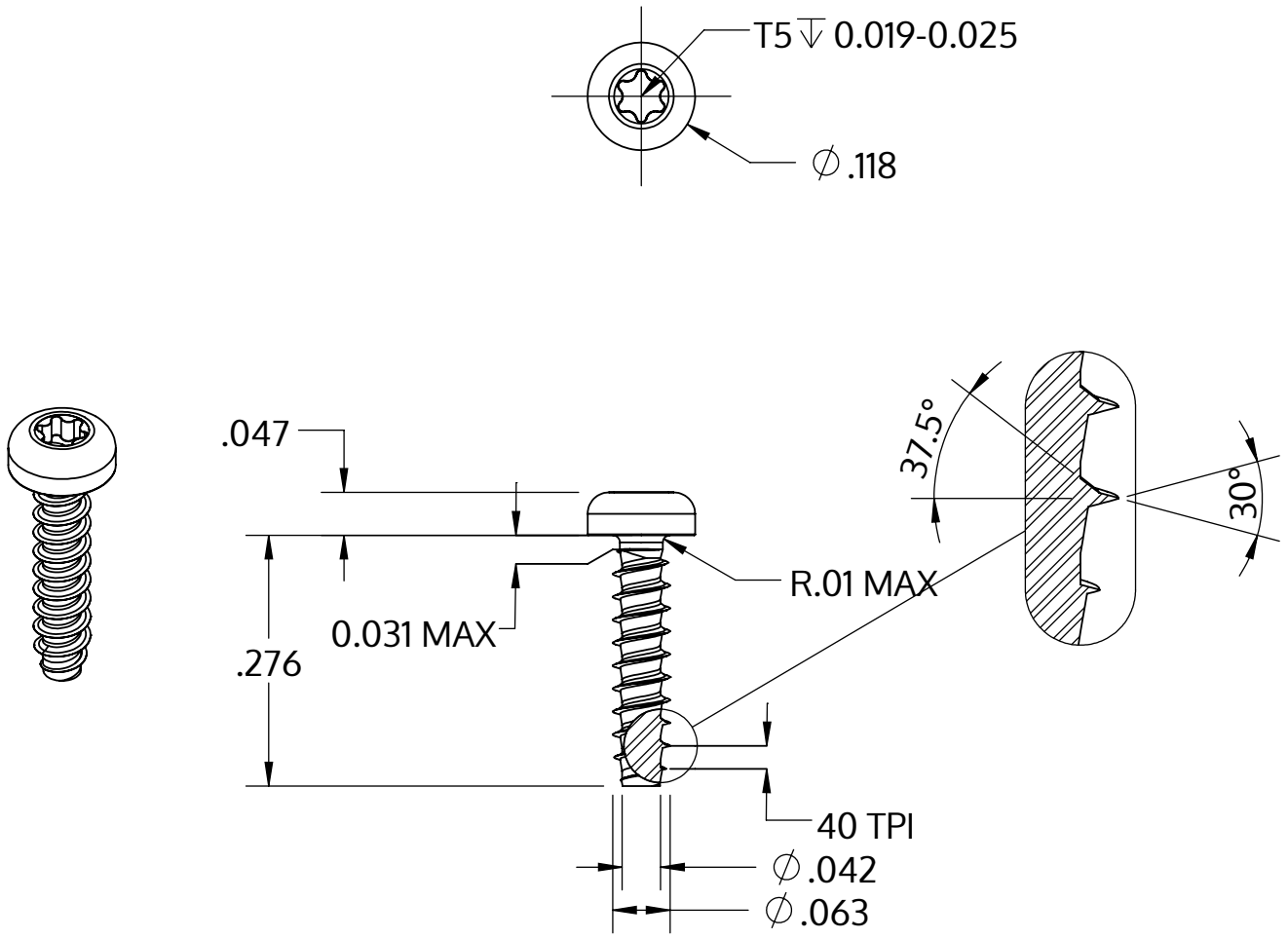

Metric size	M1.6 x 0.64 mm
US size (converted)	#0.5-40
	Tolerances [inch]
Length	+/- 0.017
Head diameter	+0 / -0.009
Head height	+/- 0.004
Thread diameter	+0.003 / -0

Descrizione	STP39 1.6x7.0 - T5
Materiale	acciaio inossidabile A2
Superficie	bianco-decapato e passivato
Peso	0.114 kg / 1000 pezzi

SCREWERK	**STP390160070E**	
_Zoll Zeichnung Größe A	Scala 5:1	2024-10