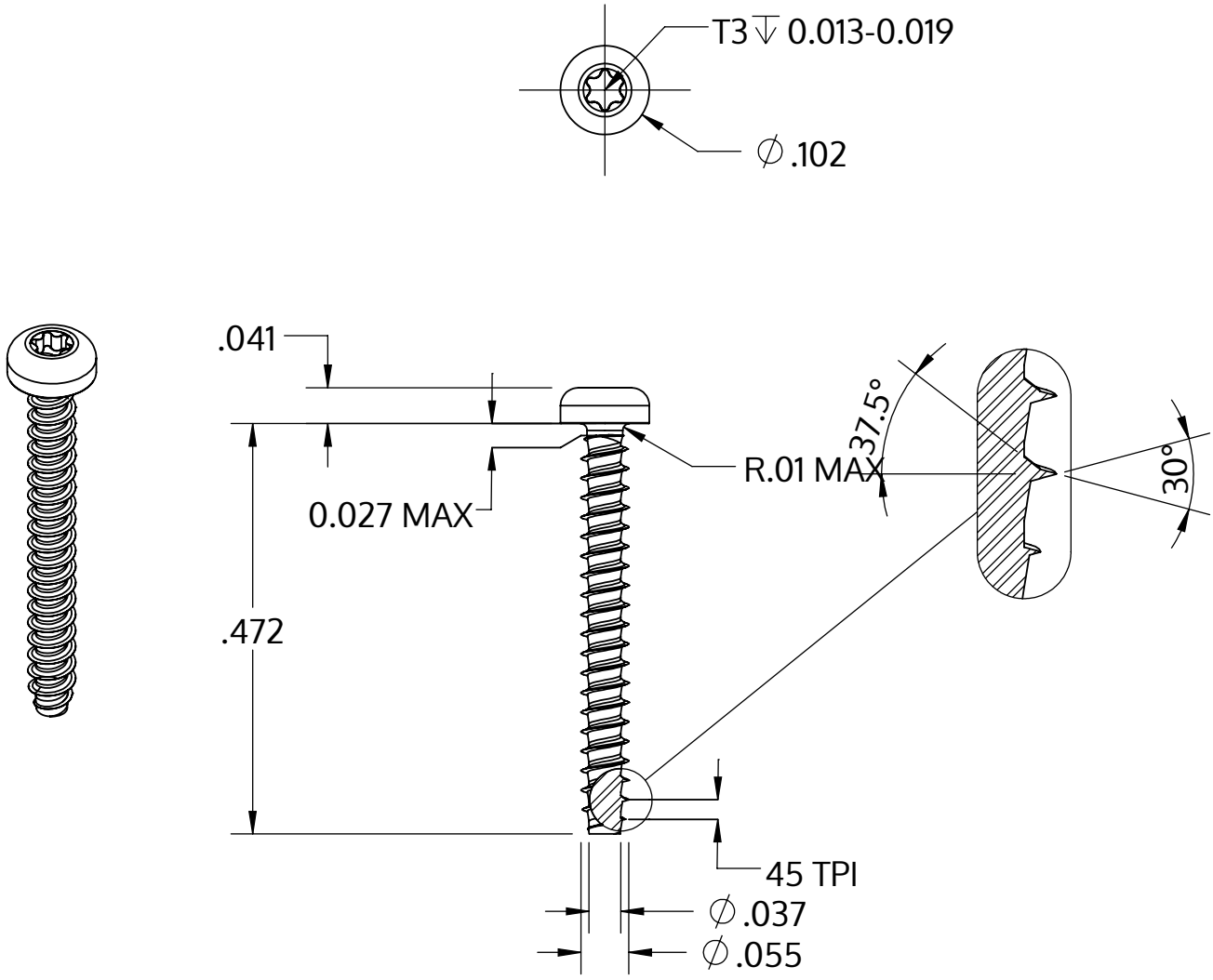

Metric size	M1.4 x 0.57 mm
US size (converted)	#0-45
	Tolerances [inch]
Length	+/- 0.021
Head diameter	+0 / -0.009
Head height	+/- 0.004
Thread diameter	+0.003 / -0

Description	STP39 1.4x12.0 - T3
Material	steel, hardened
Surface	zinc-plated 5-7 µm, baked, blue / transparent passivated
Weight	0.121 kg / 1000 pieces

SCREWERK	**STP390140120S**	
Inch Drawing Size A	Scale 5:1	2024-10