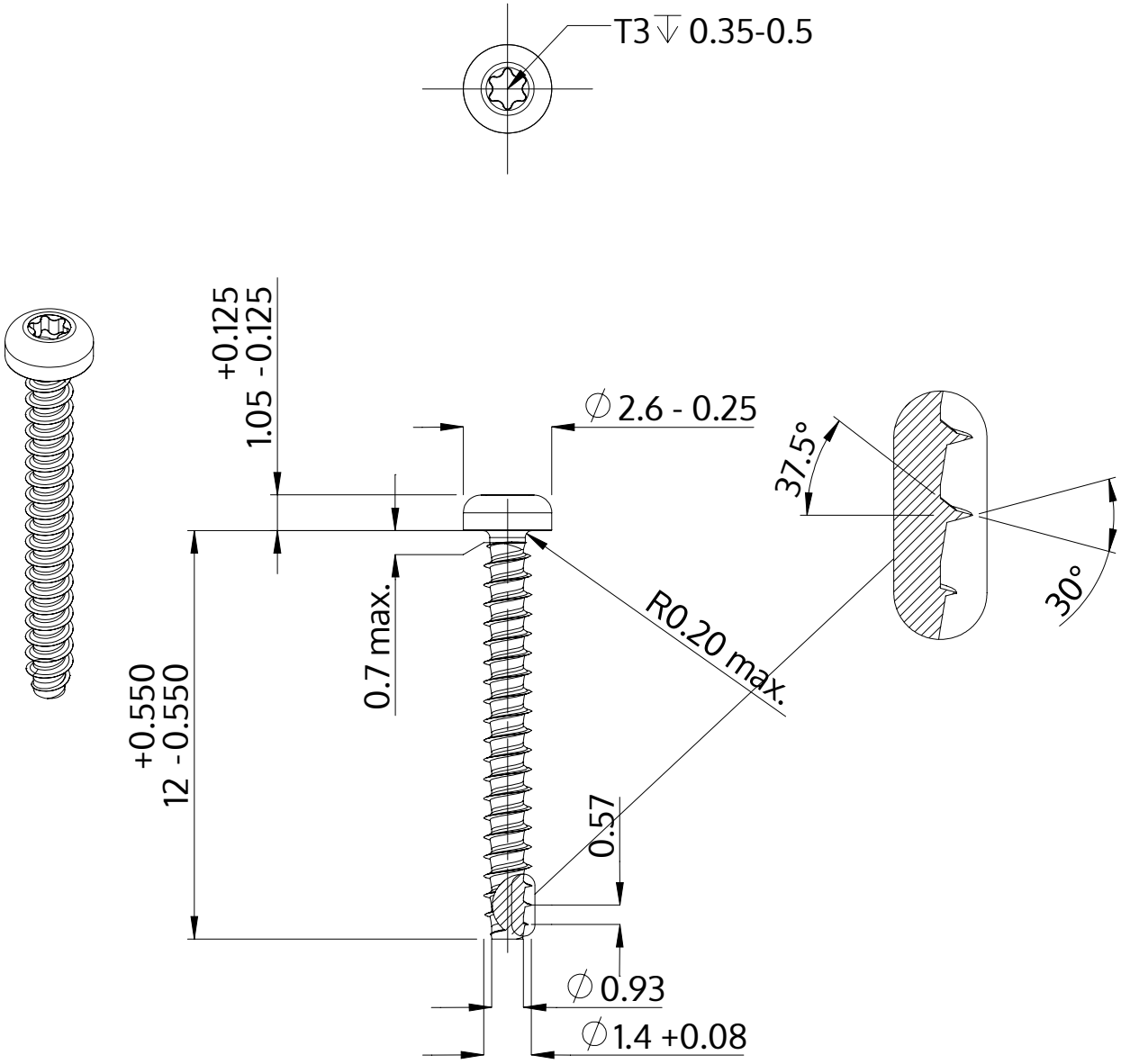

Description	STP39 1.4x12.0 - T3
Material	steel, hardened
Surface	zinc-plated 5-7 µm, baked, blue / transparent passivated
Weight	0.121 kg / 1000 pieces

SCREWERK	**STP390140120S**	
Metric Drawing A4	Scale 5:1	2024-10