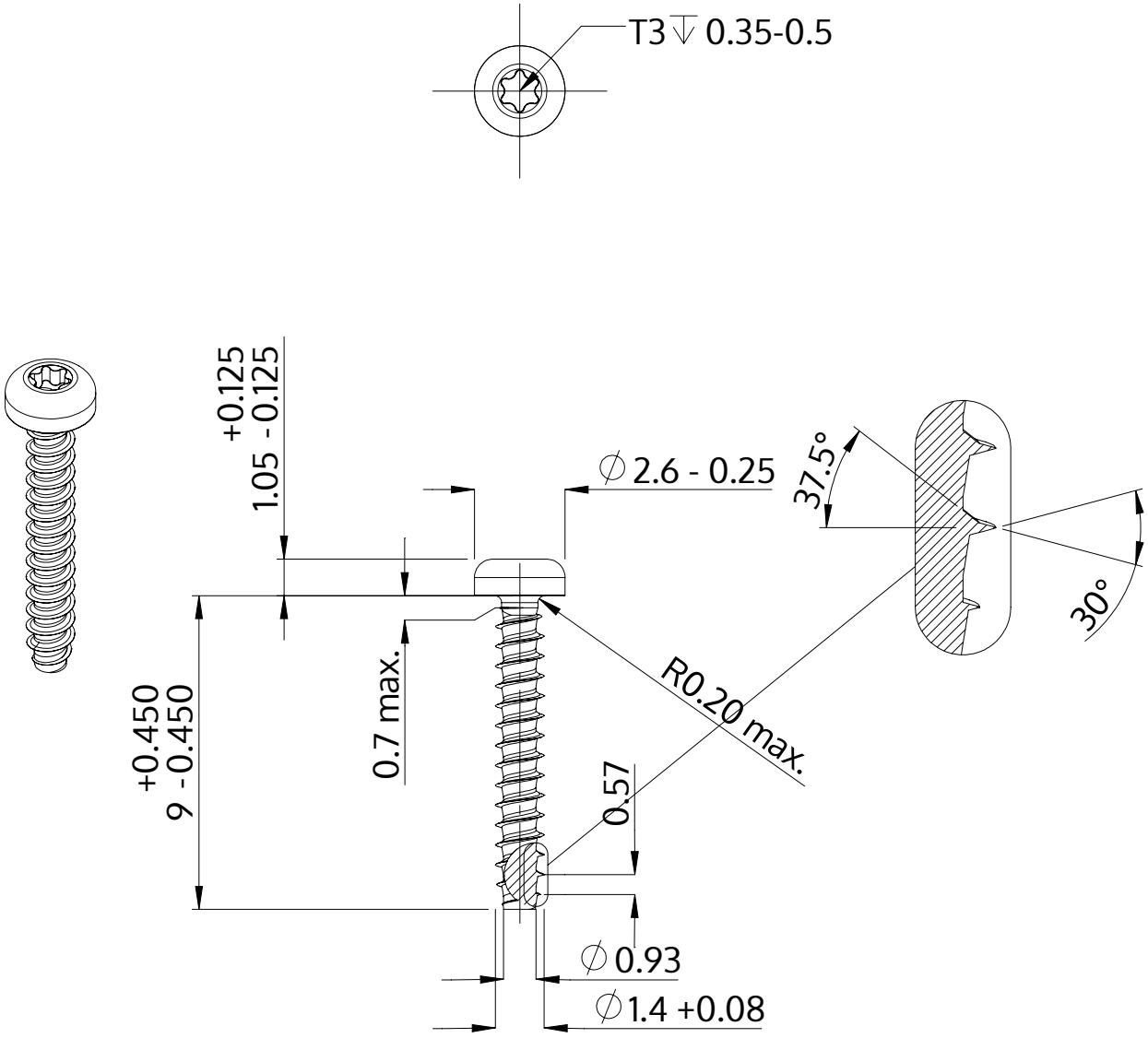

Description	STP39 1.4x9.0 - T3
Material	steel, hardened
Surface	zinc-plated 5-7 µm, baked, blue / transparent passivated
Weight	0.099 kg / 1000 pieces

SCREWERK	**STP390140090S**	
Metric Drawing A4	Scale None:1	2024-04